Lockheed Skunk Works

TR3-(D)elta

United States Patent [19]

Phillips

[11] **Patent Number: Des. 319,041**

[45] **Date of Patent: ** Aug. 13, 1991**

[54] **DELTA ROTOR WING AIRCRAFT**

[75] Inventor: **Jerry W. Phillips**, Roswell, Ga.

[73] Assignee: **Lockheed Corporation**, Calabasas, Calif.

[**] Term: **14 Years**

[21] Appl. No.: **172,742**

[22] Filed: **Mar. 24, 1988**

[52] **U.S. Cl.** **D12/331**

[58] **Field of Search** ..... D12/319, 333, 334, 338, D12/341, 342; 244/36, 12.1, 45 R, 45 A, 15

[56] **References Cited**

U.S. PATENT DOCUMENTS

D. 244,265	5/1977	Opfer	D12/333
4,149,688	4/1979	Miller, Jr.	244/36
4,566,657	1/1986	Grow	244/36
4,662,588	5/1987	Henderson	244/36
4,802,639	2/1989	Hardy et al.	D12/342

Primary Examiner—Kay H. Chin

Attorney, Agent, or Firm—Eric R. Katz

[57] **CLAIM**

The ornamental design for the delta rotor wing aircraft, as shown and described.

DESCRIPTION

FIG. **1** is a front, top and left side perspective view of a delta rotor wing aircraft showing my new design;
FIG. **2** is a front, top and right side perspective view thereof;
FIG. **3** is a front, bottom and right side perspective view thereof;
FIG. **4** is a top plan view thereof;
FIG. **5** is a front elevational view thereof;
FIG. **6** is a left side elevational view thereof;
FIG. **7** is a top plan view thereof, showing the blades of both top and bottom counter rotating rotors extended radially outward from the center of each rotor;
FIG. **8** is a front elevational view of FIG. **7**; and
FIG. **9** is a left side elevational view of FIG. **7**, the right side view being a mirror image of that shown.

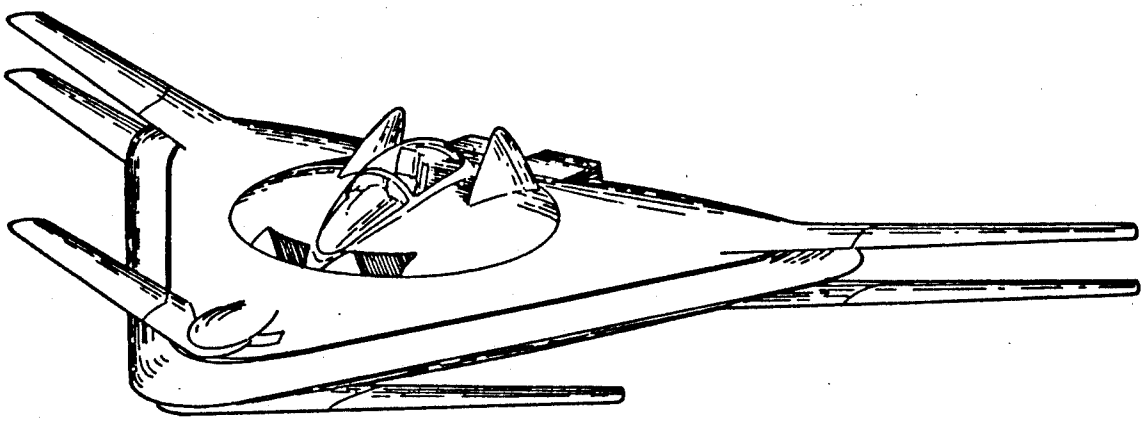

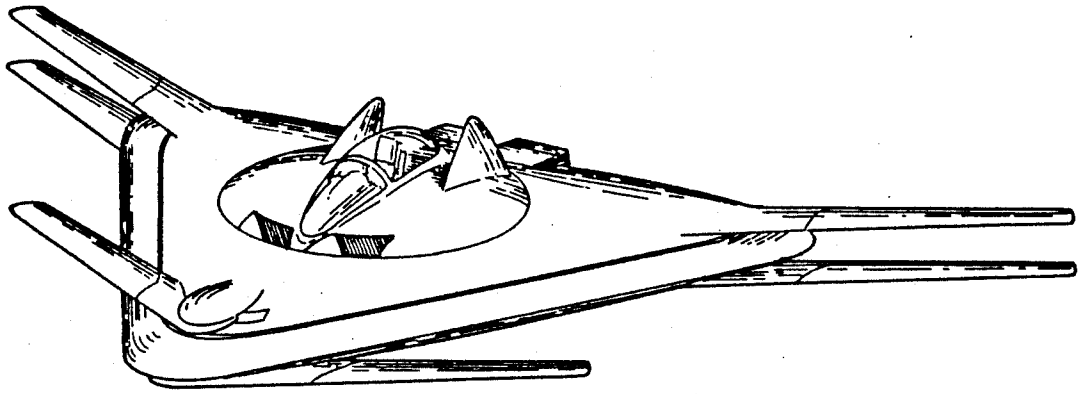

Fig. 1

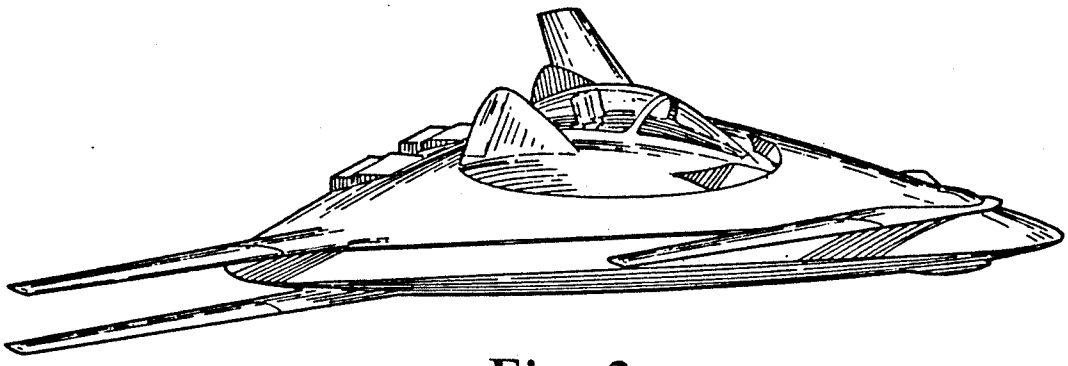

Fig. 2

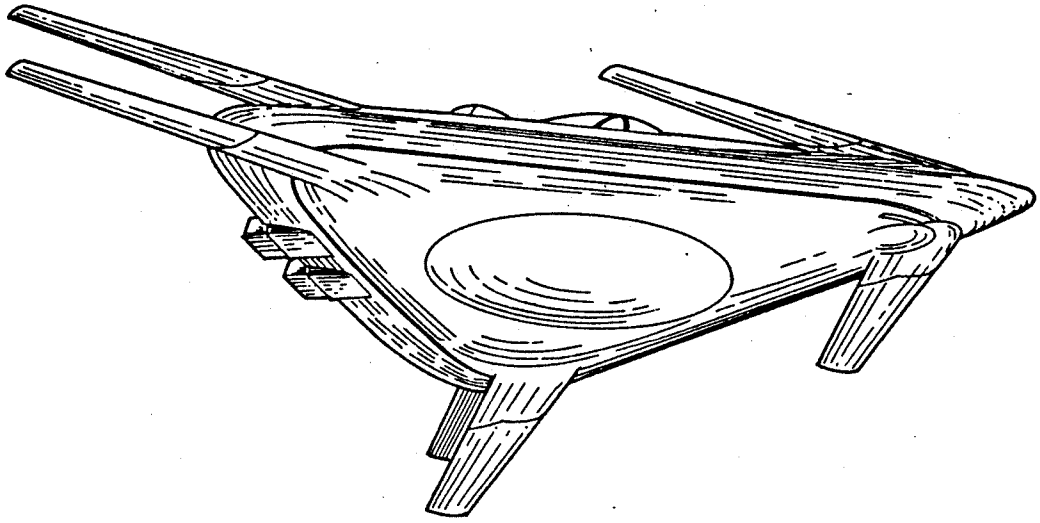

Fig. 3

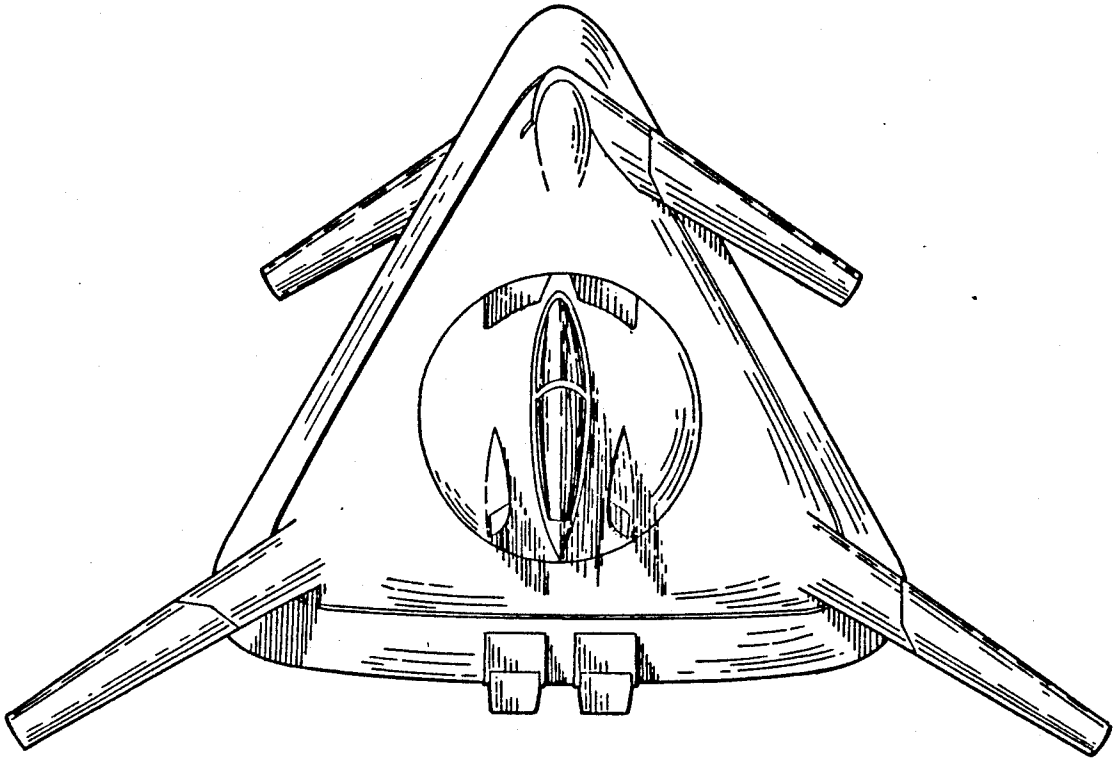

Fig. 4

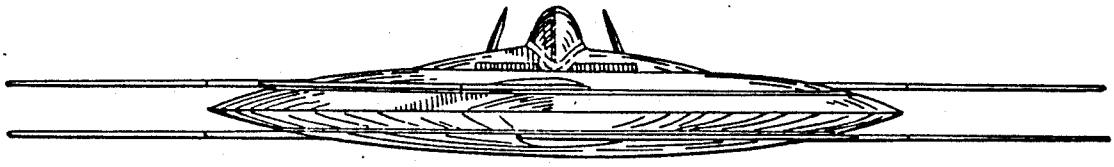

Fig. 5

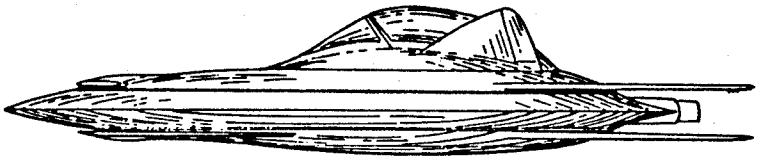

Fig. 6

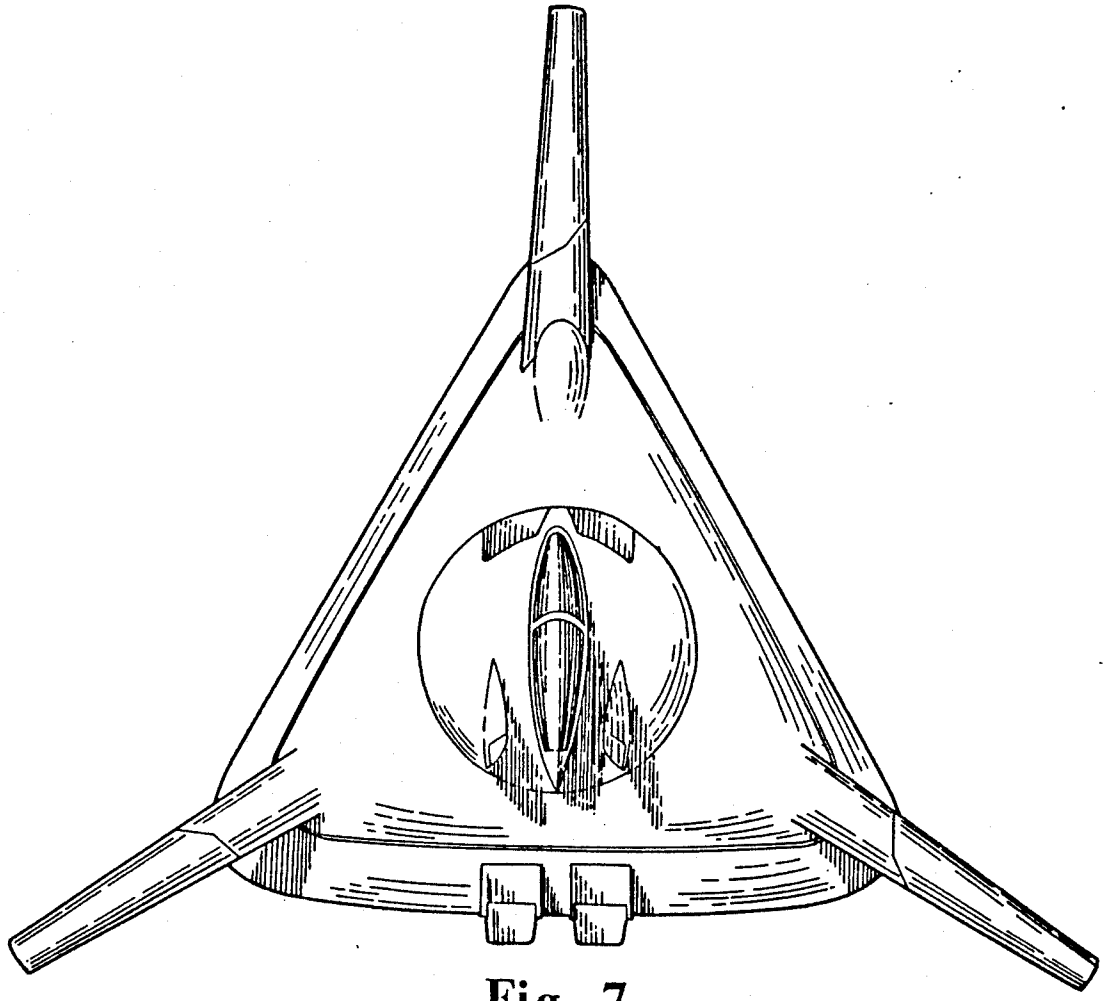

Fig. 7

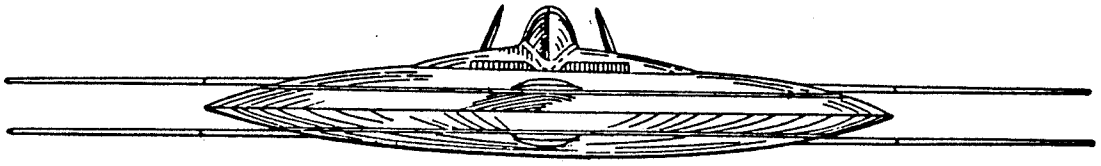

Fig. 8

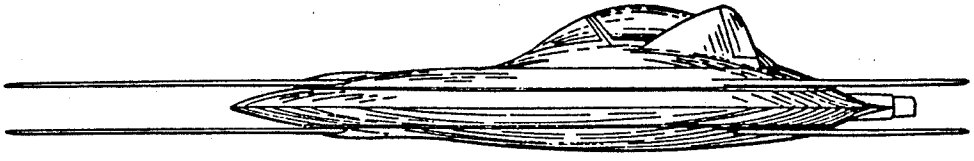

Fig. 9

United States Patent [19]

Hardy et al.

[11] **Patent Number: 4,802,639**

[45] **Date of Patent: Feb. 7, 1989**

[54] **HORIZONTAL-TAKEOFF TRANSATMOSPHERIC LAUNCH SYSTEM**

[75] Inventors: **Richard Hardy; Jonathan Hardy,** both of Seattle; **Thomas J. Kornell,** Federal Way; **Kenneth M. Tallquist,** Bellevue, all of Wash.

[73] Assignee: **The Boeing Company,** Seattle, Wash.

[21] Appl. No.: **919,207**

[22] Filed: **Oct. 14, 1986**

Related U.S. Application Data

[63] Continuation-in-part of Ser. No. 656,159, Sep. 28, 1984, abandoned.

[51] **Int. Cl.**[4] **B64G 1/14**

[52] **U.S. Cl.** ..... **244/2;** 244/158 R; 244/160; 244/172; 244/137.4

[58] **Field of Search** ..... 244/158 R, 162, 160, 244/172, 73 R, 74, 2, 137 R, 137 A, 120, 137.1, 137.4; 89/1.81 S; 60/270.1

[56] **References Cited**

U.S. PATENT DOCUMENTS

2,009,296	7/1935	Mayo	244/2
2,364,803	12/1944	Mayhew	244/2
2,368,288	1/1945	Couse et al.	244/2
2,399,217	4/1946	Fahrney	244/2
2,481,542	9/1949	Schuyler	89/1.815
2,621,000	12/1952	Robert	244/2
2,876,677	3/1959	Clark et al.	89/1.5
2,883,125	4/1959	Jarvis et al.	244/2
2,981,499	4/1961	Janney, II	244/2
2,998,208	8/1961	Di Perna	244/2
3,000,593	9/1961	Eggers et al.	244/2
3,006,576	10/1961	Elijah	244/2
3,070,326	12/1962	Griffith	244/2
3,227,399	1/1966	Dastoli et al.	244/2
3,258,228	6/1966	Crook	244/46
3,261,571	7/1966	Pinnes	244/74
3,289,974	12/1966	Cohen et al.	244/1
3,369,771	2/1968	Walley et al.	244/162
3,419,234	12/1968	Poirier	244/137
3,516,624	6/1970	Crook	244/2
3,567,156	3/1971	Bauer	244/2
3,702,688	11/1972	Faget	244/155
3,703,998	11/1972	Girard	244/13
3,753,536	8/1973	White	244/1
3,756,024	9/1973	Gay	60/270.1
3,864,907	2/1975	Corran	60/270.1
3,999,728	12/1976	Zimmer	244/2
4,265,416	5/1981	Jackson et al.	244/140
4,267,987	5/1981	McDonnell	244/2
4,451,017	5/1984	Marshall	244/2

FOREIGN PATENT DOCUMENTS

2306811	8/1974	Fed. Rep. of Germany	244/2

OTHER PUBLICATIONS

Peebles, "Air-Launched Shuttle Concepts", *Journal of the British Interplanetary Society,* Apr. 1983; vol. 36, No. 4, pp. 153–155.

Heppenheimer, "Scramjets That Will Reach Mach 25", *Popular Science,* Apr. 1986; pp. 94–97, 136 and 138.

"Technology Challenges Ahead", *Space Markets,* Spring 1986, p. 31.

Primary Examiner—Galen Barefoot

Attorney, Agent, or Firm—Joan H. Pauly

[57] **ABSTRACT**

This invention is directed toward providing a transatmospheric launch system that is essentially totally reusable, provides wide flexibility in choice of orbit, and may be launched quickly on short notice. The system of the invention is a two-stage horizontal takeoff and landing system. An orbiter vehicle (**50**) is integrated into the underside of an aircraft (**2**). Aircraft (**2**) has a cavity (**4**) opening aftwardly and downwardly to receive vehicle (**50**). Vehicle (**50**) and aircraft (**2**) are releasably connected by struts (**30, 32**). Aircraft (**2**) and vehicle (**50**) proceed to staging conditions under air breathing and then rocket power. Rocket engine (**22**) of aircraft (**2**) is throttled to produce a thrust differential with rocket engine (**66**) of vehicle (**50**). This differential causes vehicle (**50**) to automatically pivot away from aircraft (**2**) on struts (**30, 32**). After pivoting out of cavity (**4**), vehicle (**50**) is disengaged from struts (**30, 32**) and proceeds on its own to orbit. Aircraft (**2**) makes a conventional landing. Following reentry, vehicle (**50**) makes an unpowered horizontal landing. Separation is accomplished at a Mach number of about 3.3. In a second embodiment, the main engine of the orbiter (**50'**) is a scramjet (**101**) instead of a rocket.

37 Claims, 9 Drawing Sheets

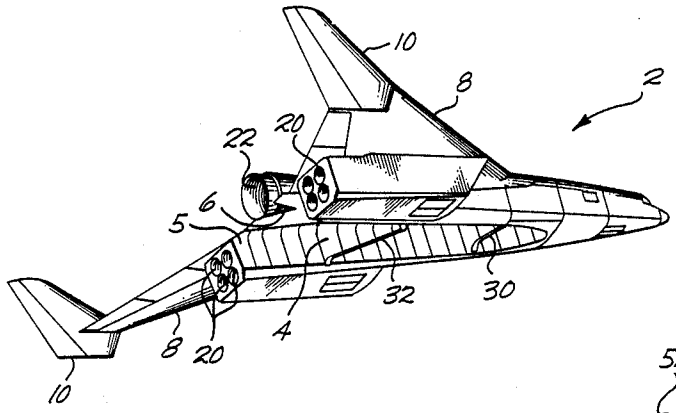

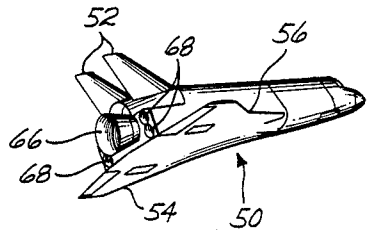

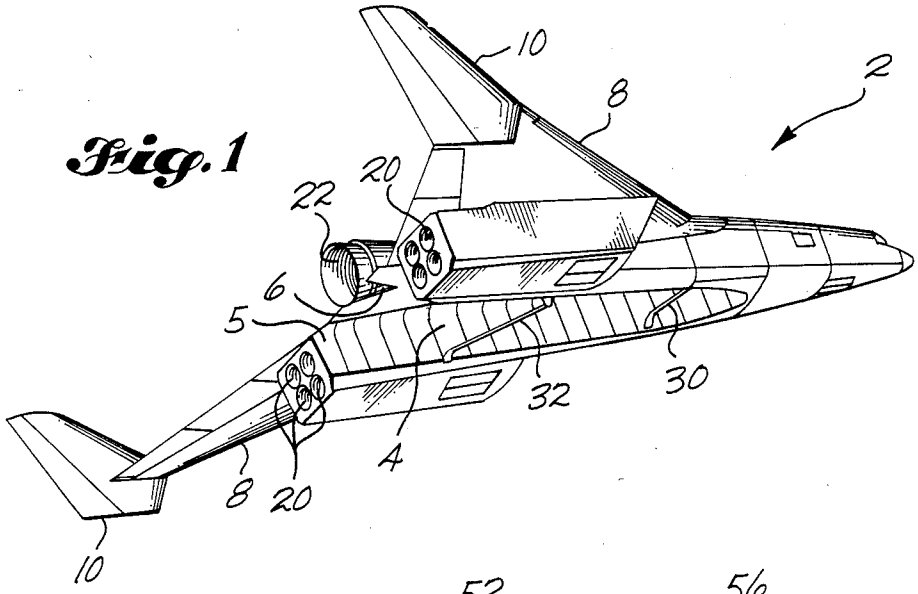

Fig. 1

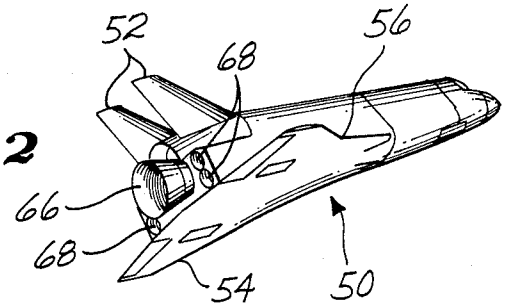

Fig. 2

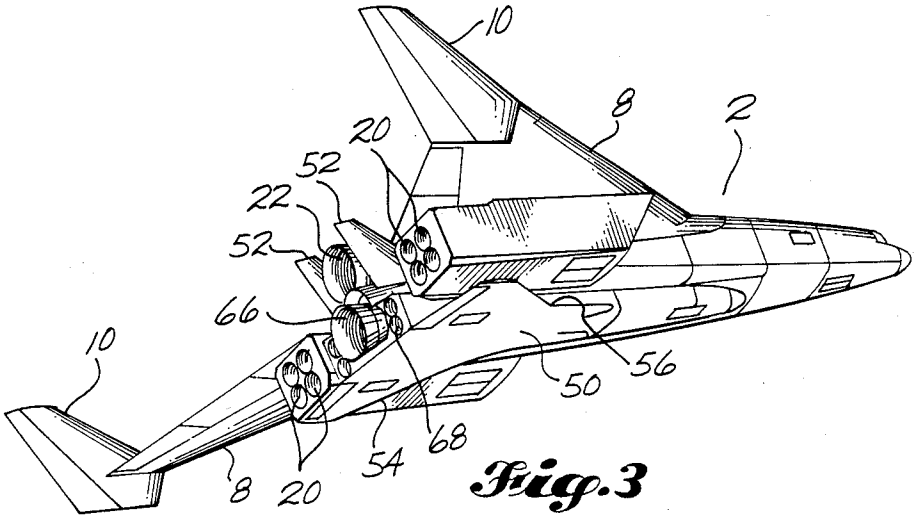

Fig. 3

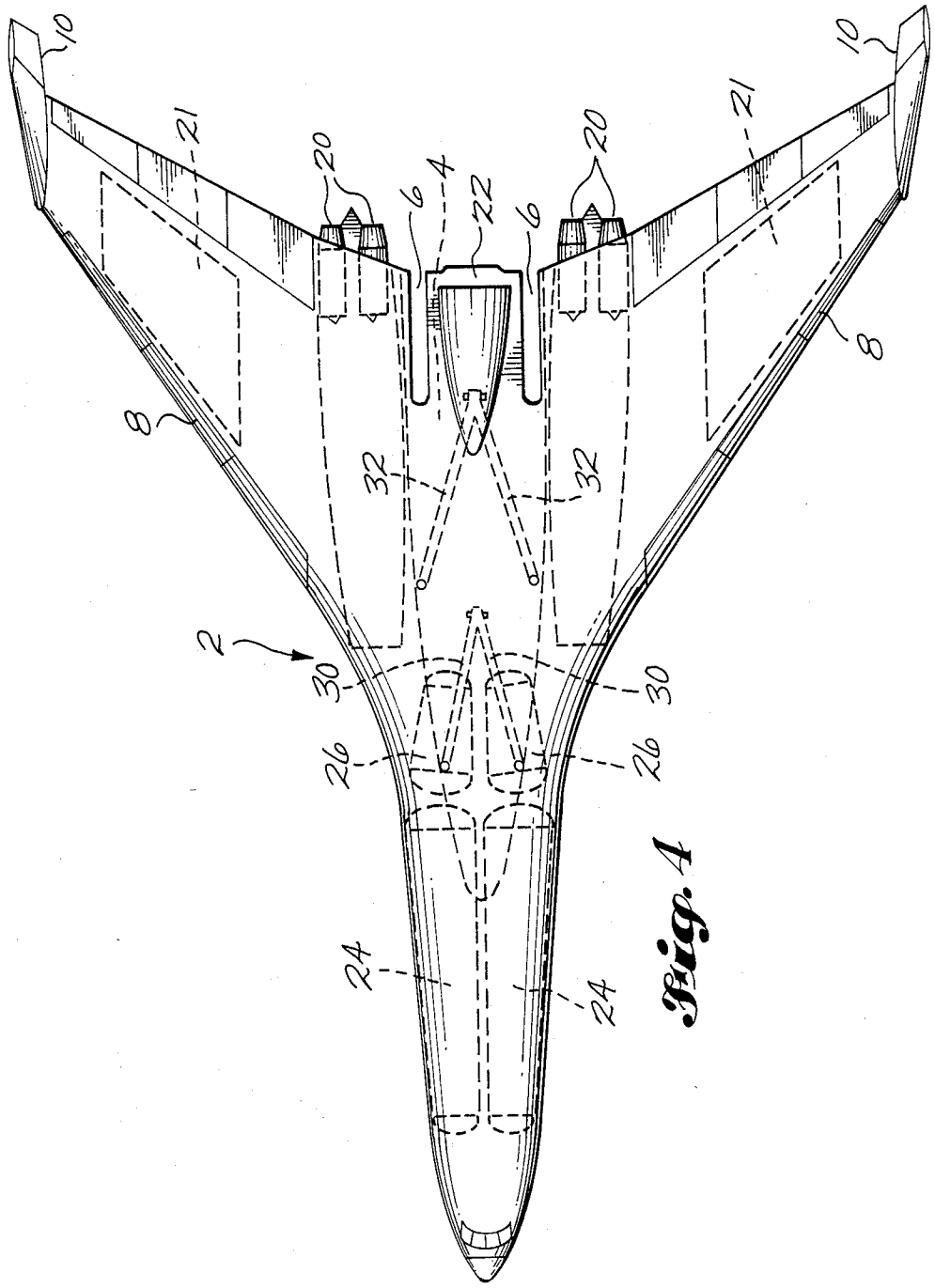

Fig. 4

LOCKHEED DELTA ROTOR WING TR3D PATENT+CITED | @HighEarthOrbit_ 9/51

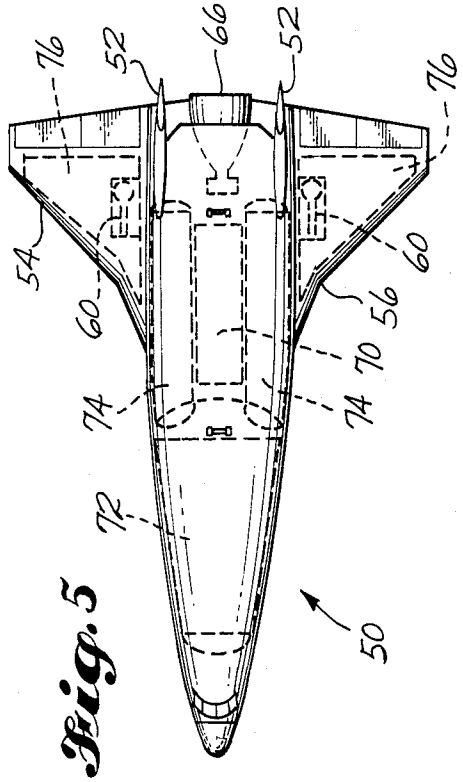

Fig. 5

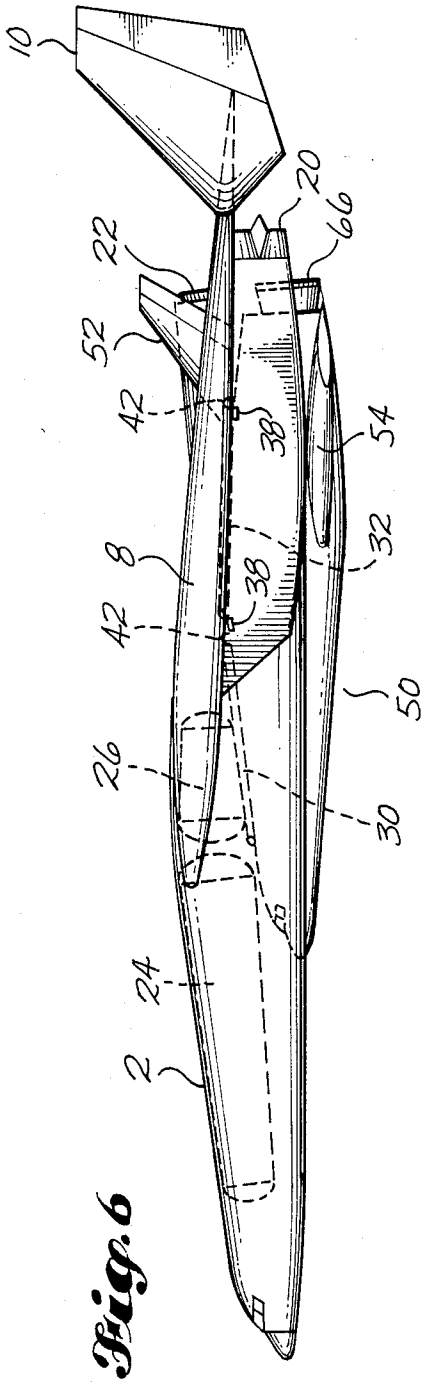

Fig. 6

LOCKHEED DELTA ROTOR WING TR3D PATENT+CITED | @HighEarthOrbit_ 10/51

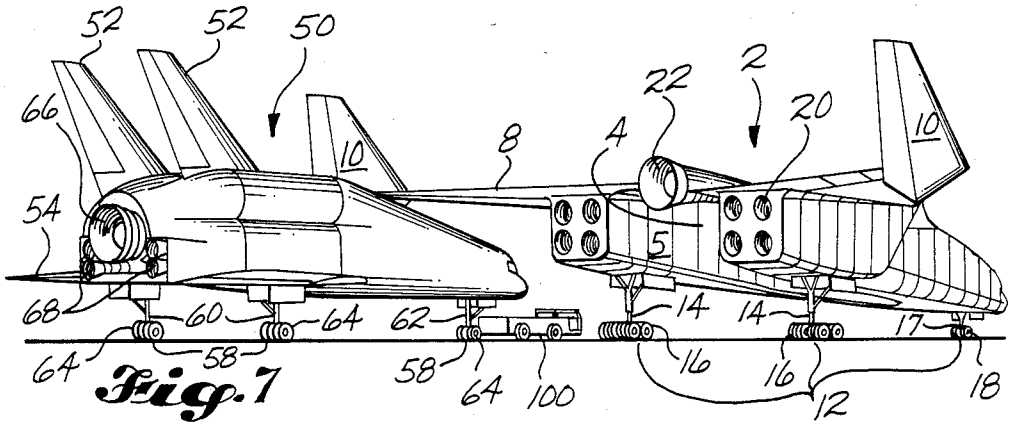

Fig. 7

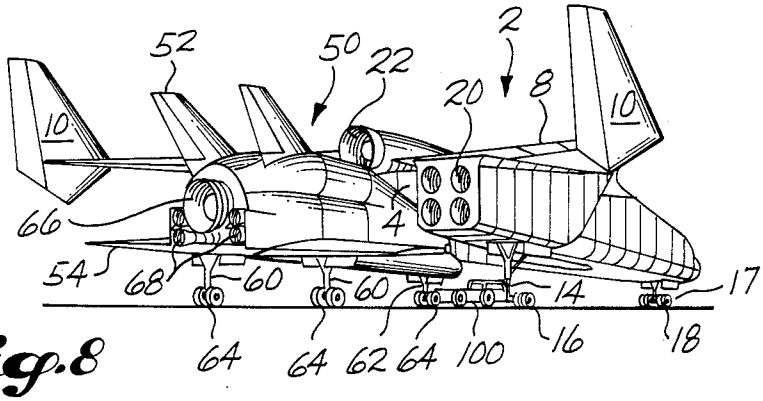

Fig. 8

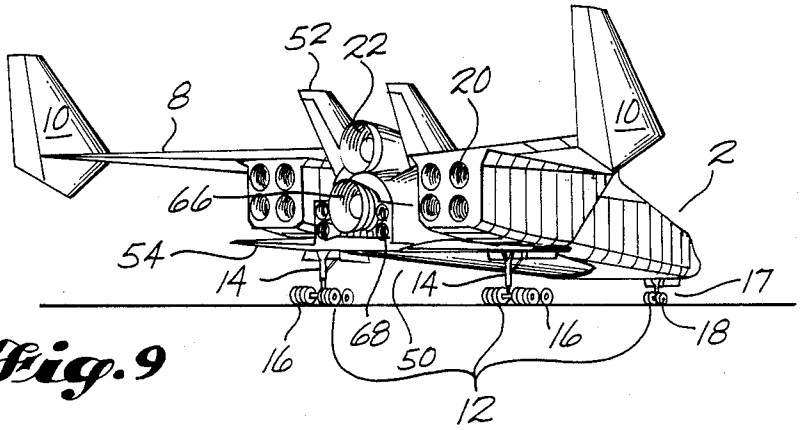

Fig. 9

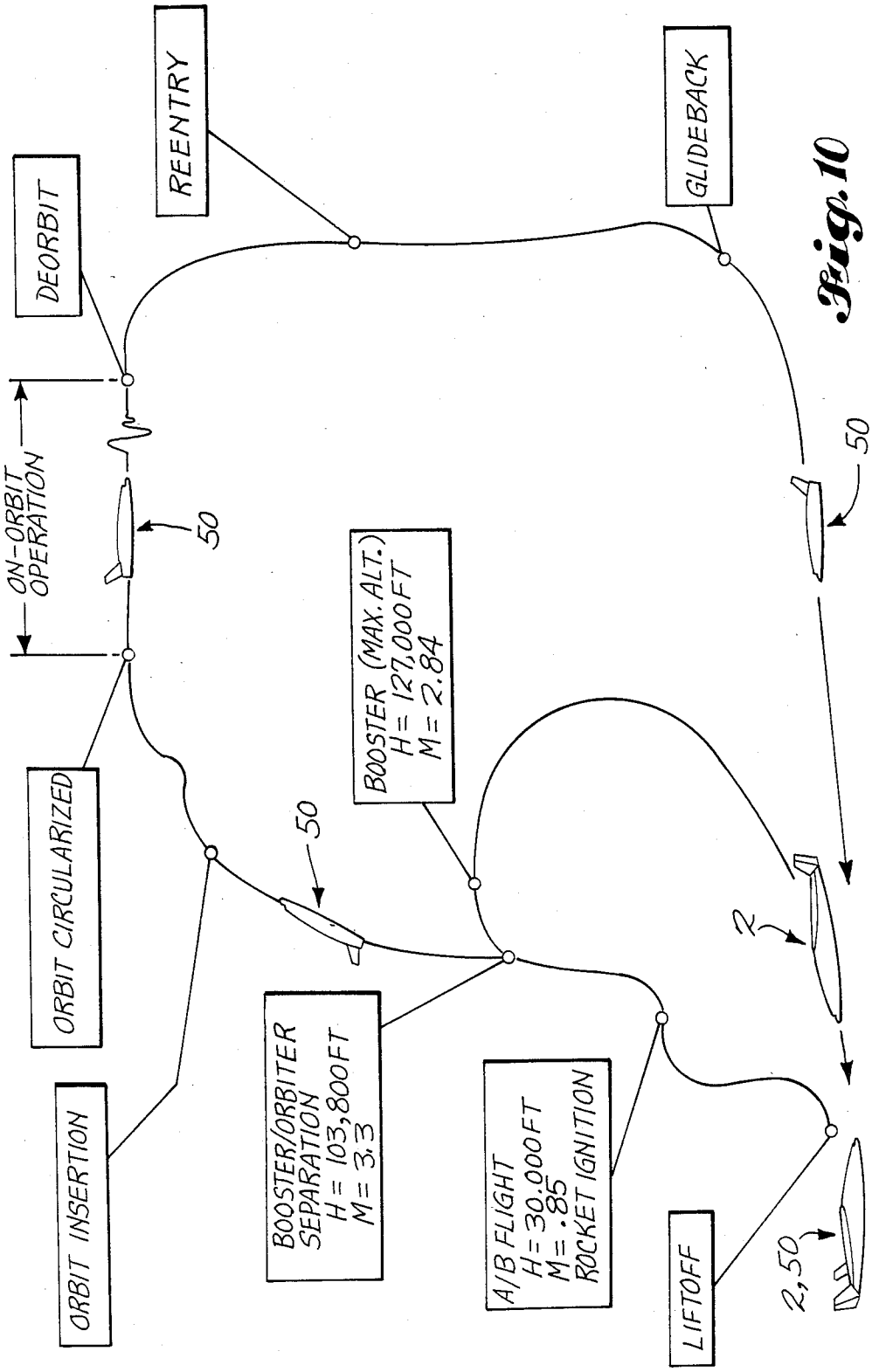
DEORBIT
REENTRY
GLIDEBACK
ON-ORBIT OPERATION
50
50
BOOSTER (MAX. ALT.)
H = 127,000 FT
M = 2.84
ORBIT CIRCULARIZED
50
2
BOOSTER/ORBITER SEPARATION
H = 103,800 FT
M = 3.3
A/B FLIGHT
H = 30,000 FT
M = .85
ROCKET IGNITION
ORBIT INSERTION
LIFTOFF
2, 50

Fig. 10

Fig. 11

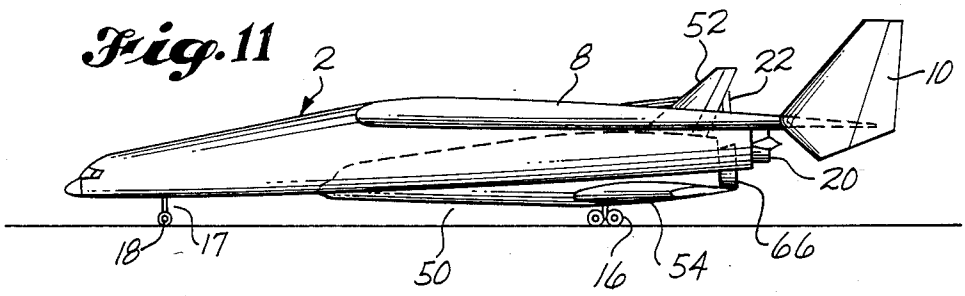

Fig. 12

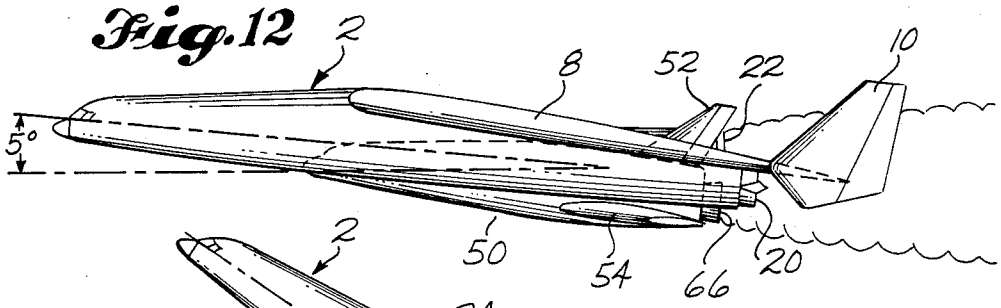

Fig. 13

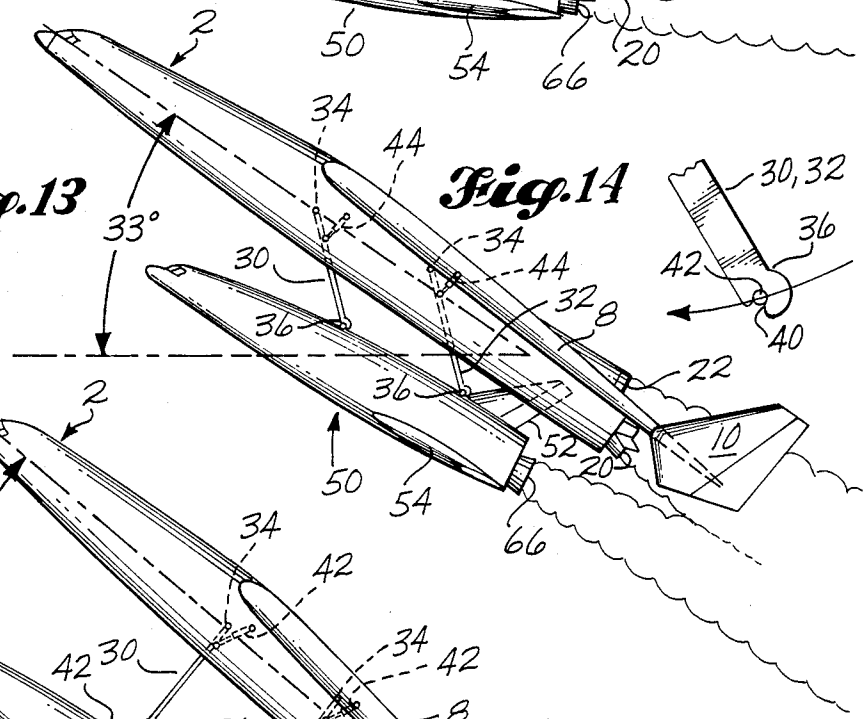

Fig. 14

Fig. 15

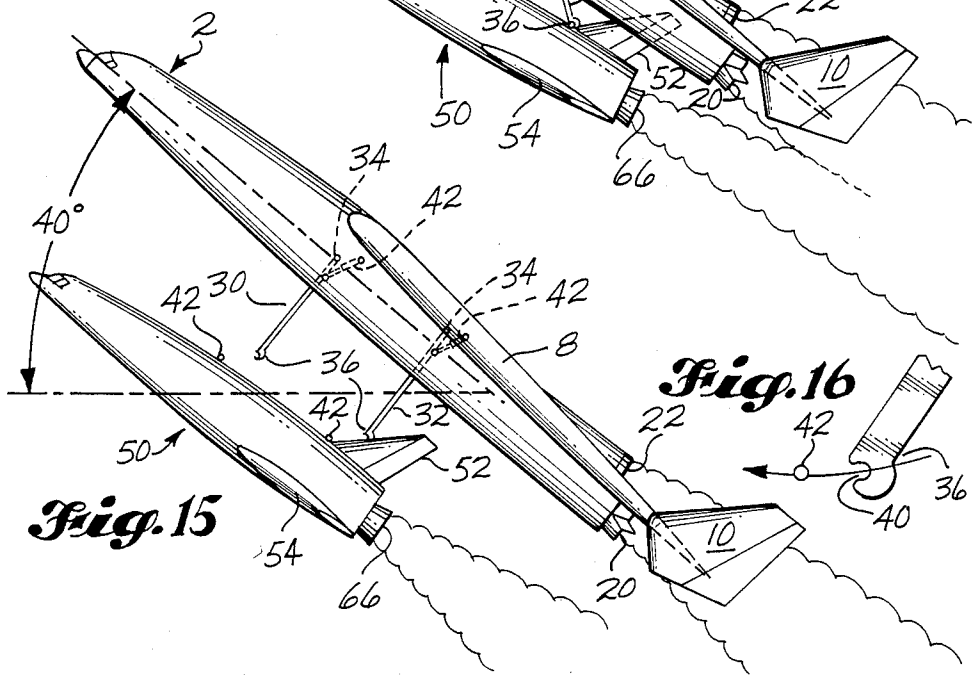

Fig. 16

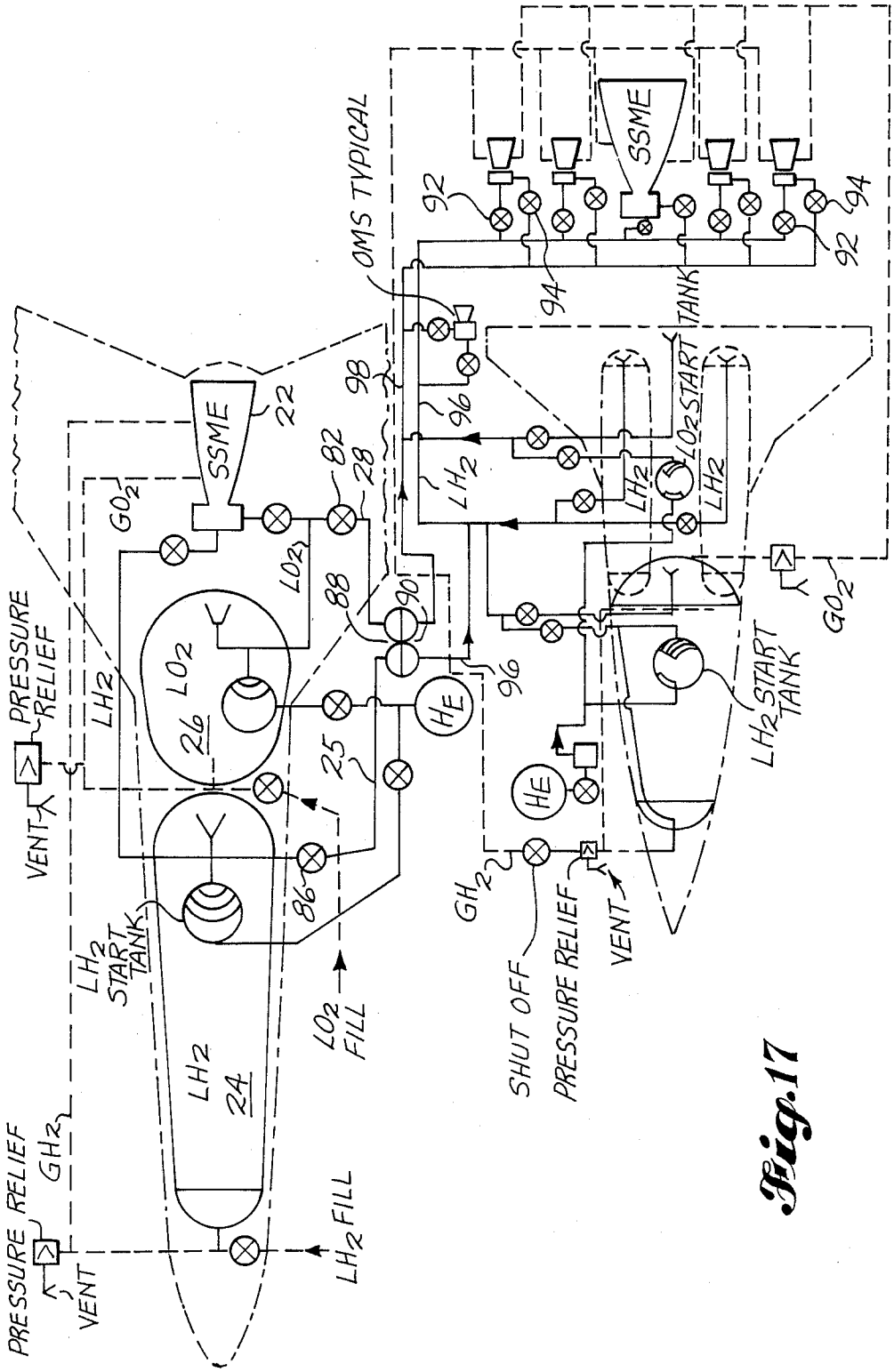
OMS TYPICAL
SSME
SSME
22
92
94
94
92
98
96
82
28
GO_2
LO_2
88
90
96
LH_2
LO_2
26
25
HE
HE
LO_2 START TANK
LH_2
LH_2
LH_2
LH_2 START TANK
GO_2
PRESSURE RELIEF
VENT
LH_2
86
LH_2 START TANK
LO_2 FILL
LH_2
24
GH_2
SHUT OFF
PRESSURE RELIEF
VENT
PRESSURE RELIEF
GH_2
VENT
LH_2 FILL

Fig. 17

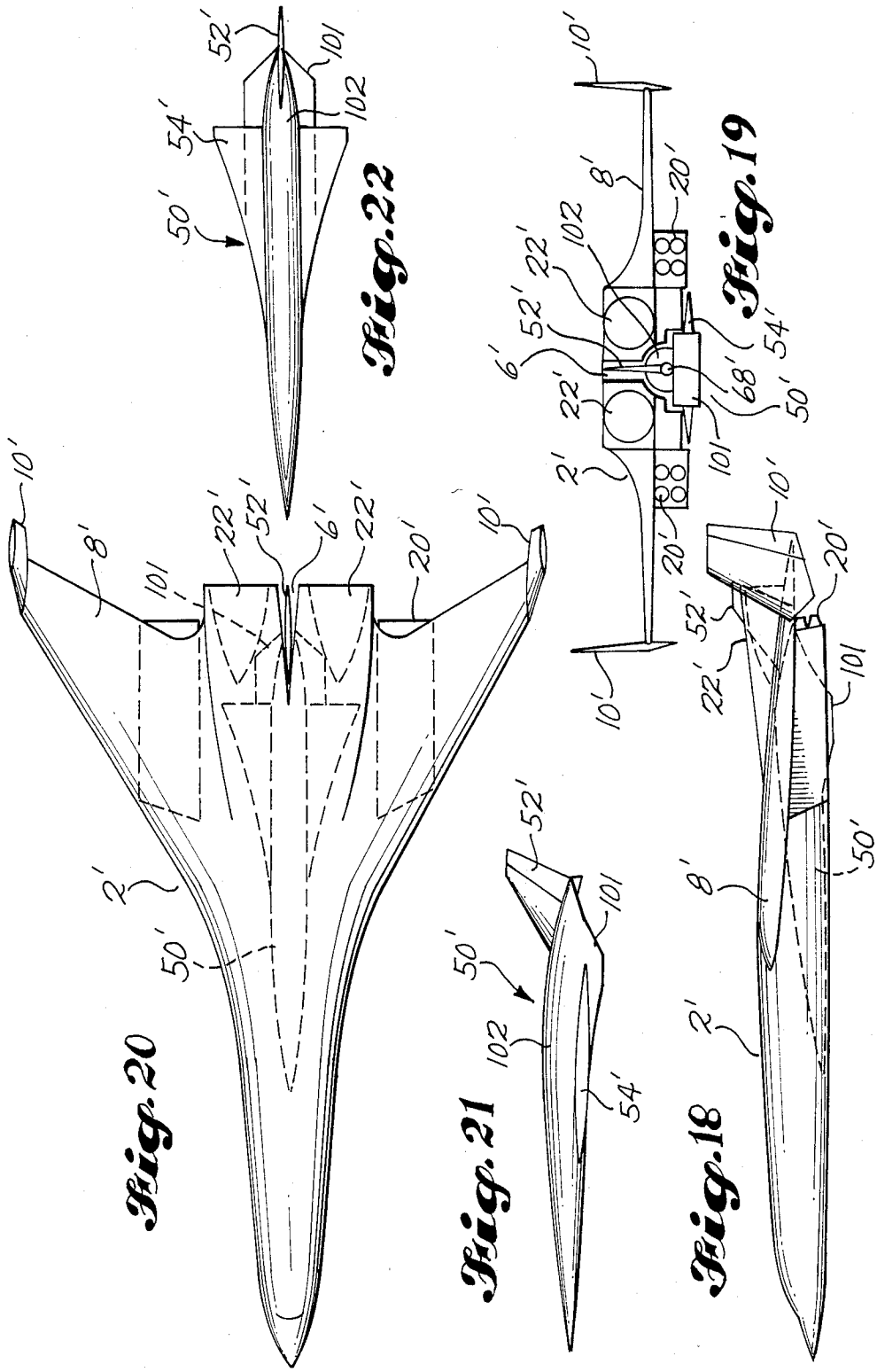
Fig. 20
Fig. 21
Fig. 22
Fig. 19
Fig. 18

LOCKHEED DELTA ROTOR WING TR3D PATENT+CITED | @HighEarthOrbit_ 15/51

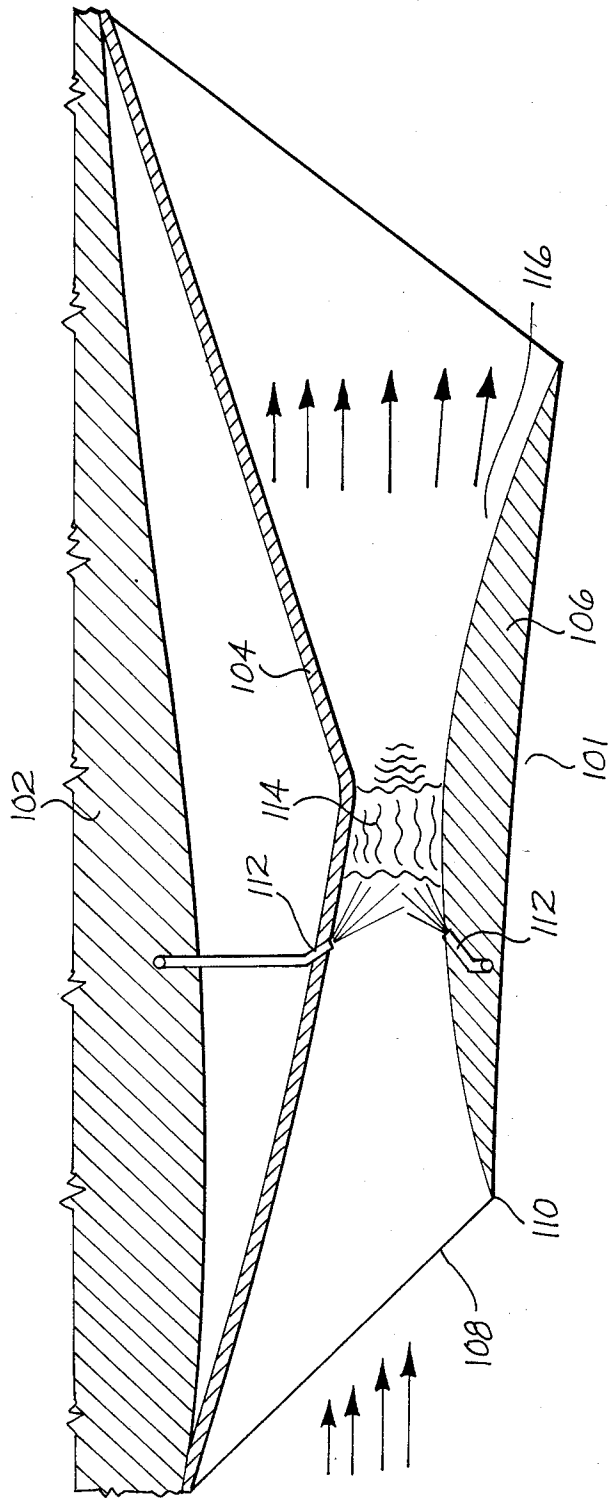

Fig. 23

HORIZONTAL-TAKEOFF TRANSATMOSPHERIC LAUNCH SYSTEM

This is a continuation-in-part of U.S. application Ser. No. 06/656,159 filed Sept. 28, 1984, now abandoned.

TECHNICAL FIELD

This invention relates to methods and apparatus of transatmospheric launch systems and, more particularly, to such a method and apparatus in which a transatmospheric vehicle is integrated into the underside of an aircraft for a horizontal takeoff, the aircraft maneuvers under air breathing engine power to obtain a desired orbit inclination and launch azimuth, a thrust differential between an aircraft rocket engine and a transatmospheric vehicle rocket engine (or scramjet engine) automatically pivots the aircraft and vehicle away from each other to accomplish separation, and before separation the maximum Mach number is about 3.5.

BACKGROUND ART

The use of orbiting vehicles for carrying out various types of missions in space has been the subject of intense research and development activity in the past couple of decades. This activity has led to the space shuttle system that is currently in use. As is well-known, the current system is a vertical takeoff system in which a transatmospheric shuttle vehicle is mounted piggyback on booster rockets for takeoff and launch. This system has had considerable success and has accomplished a number of missions. However, vertical takeoff systems in general and the current shuttle system in particular have a number of serious limitations.

The problems associated with vertical takeoff systems include the need for complex, extremely heavy, and expensive ground support equipment in order to accomplish takeoff. Such equipment is necessary, for example, in order to handle the large vertically oriented booster stage and to accomplish the cumbersome process of mounting the orbiter vehicle up onto the booster stage in piggyback fashion. The need for such equipment results in very high launch costs and therefore a high cost for each of the missions performed by the orbit vehicle. In addition, such equipment is provided at only a very few highly specialized ground installations. This severe limitation on the choice of launch sites results in corresponding limitations on flexibility in the system in terms of obtainable orbits and/or times of launching.

Known vertical takeoff systems, such as the Space Shuttle, are also subject to the problem of nonreusability of portions of the booster structure. For example, some structural elements such as fuel tanks, are discarded at orbit altitude and cannot be recovered. The nonrecoverability and consequent total nonreusability of such elements adds significantly to the cost of the system since the total cost of such elements is a recurring cost that is fully experienced each time the orbit vehicle is launched. Other elements of the booster structure are recoverable but are reusable only in a limited sense since they generally require time consuming and expensive refurbishment. Therefore, only part of the cost of such recoverable elements is nonrecurring from launch to launch. The recurring portion of the cost of such recoverable elements further adds to the overall cost of the system.

Other problems associated with vertical takeoff systems include operational limitations that severely restrict the flexibility of such systems. The turn around time, or the time between launches, is quite long because of the need to recover and refurbish the recoverable booster structure and the relatively long time required to make all the preparations necessary for a vertical takeoff. These preparations include readying and positioning the booster stage and mounting the orbiter stage onto the booster stage. In addition to greatly extending turn around time, the long launch preparation time makes it virtually impossible to accomplish a launch on short notice.

The operational limitations also include severe limitations on the orbits that may be obtained from a given launch site without incurring unacceptable penalties. Such penalties include a great loss in time in waiting for the ground track of an orbiting structure that is to be intercepted by the transatmospheric vehicle to pass over the launch site. Efforts to avoid time penalties by providing the transatmospheric vehicle with significant orbit maneuver capabilities lead to the penalty of decreased payload capacity because of the need for the orbitor to carry with it into orbit a significantly increased amount of fuel. Such losses in payload capacity are generally prohibitive, and therefore, maneuvering in orbit is not a practical solution to the problem of providing orbit flexibility. The problem is further aggravated by the fact that orbits of inclination less than the launch latitude cannot be reached at all for most systems without an orbit plane change maneuver.

The time limitations of vertical takeoff systems—the long turn around and launch preparation times—can be tolerated in nonemergency situations in which a mission may be planned well in advance. However, emergency situations, such as those in which persons in orbit are in need of rescue or a military mission must be accomplished very quickly, the time restrictions of vertical launch systems are unacceptable. In order to provide the capability for adequately dealing with such emergency situations, there is a great need for a launch system in which preparations for a launch may be made on very short notice, a target orbit may be attained without time or weight penalties, and any necessary second and subsequent launchings may be accomplished fairly rapidly. Such quick launch and turn around capabilities and flexibility in obtainable orbits would also serve to reduce the cost of the launch system relative to both emergency and nonemergency missions.

Various concepts for horizontal takeoff launch systems have been suggested. These concepts avoid most of the problems associated with vertical takeoff systems, but have other problems associated with their proposed implementation. In general, these concepts cannot be made truly operational by use of existing technology. Therefore, the expected development costs of systems based on these concepts are quite high and dates of completion of operational systems would be relatively far into the future. Another problem associated with suggested horizontal takeoff concepts is the inability to meet the ever present need for a "positive" payload. For a launch system to be capable of providing a positive payload, it must be capable of launching into orbit a gross weight that is greater than the weight of the orbiter vehicle itself plus the fuel required by the orbiter vehicle. The gross weight minus the combined vehicle and fuel weight is the potential payload. In a fully operational practical launch system, the potential

payload is not only positive but is also above a practical minimum. Finding a solution to the problem of providing a horizontal takeoff system capable of launching a positive payload that equals or exceeds a practical minimum has proved very difficult but is crucial to the success of any such system.

U.S. Pat. Nos. 3,702,688, granted Nov. 14, 1972, to M.A. Faget, and No. 4,265,416, granted May 5, 1981, to L.R. Jackson et al each disclose a system for launching a space shuttle type vehicle. The system disclosed by Faget is a two stage vertical takeoff system in which the shuttle vehicle is mounted on the booster vehicle in piggyback fashion. Faget describes the booster vehicle as being provided with air breathing auxiliary engines that are started after the booster attains a normal subsonic flight attitude following staging. The booster is than recovered by means of a conventional horizontal wheel landing. Upon completing its mission, the orbiter reenters and lands in a manner similar to the booster vehicle.

The launch system disclosed by Jackson et al is a horizontal takeoff and landing system. The system includes an orbit vehicle and two smaller booster vehicles. These booster vehicles are releasably connected to the underside of the two halves of the delta wing of the orbiter vehicle. Each connection is accomplished by means of a pylon that extends upwardly from the booster and is attached to the orbiter vehicle by exploding bolts. The boosters are unmanned and radio controlled. The lift required to ascend to the staging altitude is provided by the wings of both the orbiter and the booster vehicles.

The patent literature also includes proposals for linking two space vehicles. In U.S. Pat. No. 3,289,974, granted Dec. 6, 1966, C.B. Cohen et al disclose a two stage orbit vehicle. This vehicle consists of a delta wing aircraft that is nested into the top of a pod that provides space for crew movement and payload equipment during orbit and a heat shield for the aircraft during reentry. The two stages separate following reentry and prior to landing. Telescoping rods eject the aircraft from the pod. The aircraft makes a conventional wheel landing, and the pod descends by parachute. U.S. Pat. No. 3,753,536, granted Aug. 21, 1973, to N. White discloses a mechanism for coupling two orbiting space vehicles. A larger carrier vehicle extends an annular coupling from a hold in its body. The vehicle to be carried moves into engagement with the annular coupling and then is swung down into the hold of the carrier vehicle.

In U.S. Pat. No. 2,368,288, granted Jan. 30, 1945, K.W. Couse et al disclose a system in which supply units, such as ground vehicles, are attached to a dual fuselage aircraft for transport by the aircraft. A ground vehicle to be transported is separated into forward and aft portions which are rolled into contact with the forward and aft portions, respectively, of the center wing of the aircraft. Each half of the ground vehicle has a slot therein which receives a portion of the center wing. When the two halves have been rolled into position surrounding the wing, the two halves are secured together and take on the appearance of a third fuselage.

U.S. Pat. Nos. 3,227,399, granted Jan. 4, 1966, to J. Dastoli et al, and 3,999,728, granted Dec. 28, 1976, to G. F. Zimmer each disclose a composite aircraft configuration in which an escape capsule or compartment is integrated into a top portion of the main part of the aircraft. In the Dastoli configuration, the detachable compartment forms the upper portion of the fuselage of the complete aircraft. The compartment is provided with retractable helicopter blades, and a hydraulic release allows the compartment to move upwardly. The Zimmer escape capsule forms the cabin and part of the leading edges the wings of the complete aircraft. The capsule is separated by means of rockets that are carried by the capsule and are directed toward the main portion of the aircraft to provide an ejection force.

A number of other examples of composite aircraft configurations can be found in the patent literature. These configurations have purposes such as launching an aircraft, providing an escape, and transporting cargo. U.S. Pat. Nos. 2,009,296, granted Jul. 23, 1935, to R. H. Mayo, 2,364,803, granted Dec. 12, 1944, to P. Mayhew, and 3,070,326, granted Dec. 25, 1962, to A. A. Griffith each disclose a configuration in which one aircraft is launched from a position on top of another aircraft. U.S. Pat. Nos. 2,883,125, granted Apr. 21, 1959, to A. J. Jarvis et al, 2,998,208, granted Aug. 29, 1961, to J. Di Perna, and 3,006,576, granted Oct. 31, 1961, to E. A. Elijah each disclose a configuration in which an escape aircraft is mounted on top of another aircraft. N. L. Crook discloses a configuration in which a separate payload aircraft is carried suspended from a control aircraft in U.S. Pat. Nos. 3,258,228, granted Jun. 28, 1966, and 3,516,624, granted Jun. 23, 1970. Configurations in which a subservient aircraft is carried within and deployed from an interior compartment of a primary aircraft are disclosed in U.S. Pat. Nos. 3,567,156, granted Mar. 2, 1971, to D. L. Bauer, and 3,703,998, granted Nov. 28, 1972, to P. F. Girard. U.S. Pat. Nos. 2,876,677, granted Mar. 10, 1959, to J. R. Clark et al, and 3,000,593, granted Sept. 19, 1961, to G. Eggers et al each disclose a configuration in which a body such as a missile or a drone is mounted on a wing of an aircraft. U.S. Pat. No. 3,419,234, granted Dec. 31, 1968, to A. G. Poirier discloses a system in which a rescue aircraft lowers a coupling that engages the top of a damaged aircraft to transfer people from the damaged aircraft to the rescue aircraft. U.S. Pat. Nos. 2,981,499, granted Apr. 25, 1961, to R. B. Janney II, and 4,267,987, granted May 19, 1981, to W. R. McDonnell each disclose a system in which one aircraft is used to assist another aircraft in taking off. The Janney patent discloses a catapult launch vehicle that engages the underside of the vehicle to be launched. The McDonnel patent discloses a system in which an airborne helicopter engages the top of an airplane to enable the airplane to take off either vertically or with a very short ground run.

U.S. Pat. No. 2,399,217, granted Apr. 30, 1946, to D. S. Fahrney discloses a system in which smaller aircraft are mounted to underside portions of the wings or belly of a carrier glider for transport. An aircraft is lifted into and lowered from its stowed position by a cable and pulley arrangement that operates a trapeze. U.S. Pat. No. 2,621,000, granted Dec. 9, 1952, to R. A. Robert discloses a system in which a high speed aircraft is linked to a carrier aircraft and is launched from the carrier aircraft. In the launch procedure, the speed of the carrier engine is increased and the power of the high speed aircraft is simultaneously adjusted, and then the locking device that secures the two aircraft together is released to allow the high speed aircraft to separate from the carrier under its own power at a lower speed than the carrier. The two aircraft may be linked in flight for refueling the smaller high speed aircraft. U.S. Pat. No. 4,451,017, granted May 29, 1984, to W. R. Marshall discloses a three stage rocket vertical launch vehicle in

which propellants are fed from one stage to another to enable the vehicle to parallel stage its use of engines and components.

U.S. Pat. No. 2,481,542, granted Sept. 13, 1949, to G. L. Schuyler discloses a device for displacing a projectile from a bomb bay a safe distance before the projectile is allowed to fall freely or is ignited. The projectile is attached to the forked outer ends of displacing arms by attaching pins. The inner ends of the displacing arms are pivotably mounted to the fuselage within the bomb bay. The projectile is pivotably moved into a lowered position by a cable mechanism or by the action of gravity. Following the lowering of the projectile, the latching pins are released and then the projectile is ignited.

West German Pat. No. 2,306,811, granted to E. Foell, and laid open on Aug. 14, 1974, discloses a composite aircraft in which a carrier aircraft has a fuselage and wings that define a free space for receiving a carried flight device. The outside surfaces of the flight device complement the shaping of the carrier aircraft and at least partially increase the carrier's lift surface. In one embodiment, shown in FIG. 4 of the Foell patent, the front section of the flight device fits into and "grips" the fuselage of the carrier. The carrier has a relatively short fuselage and strongly swept-back wings. The flight device completes the wings of the carrier into a delta wing.

Launching systems for shuttle craft are disclosed in an article by Curtis Peebles, entitled "Air-Launched Shuttle Concepts", in the April 1983 issue of the Journal of the British Interplanetary Society, Vol. 36, No. 4. Each of the shuttle concepts discussed in the article include a first stage aircraft capable of taking off from a conventional runway and a second stage that goes into orbit after separation. A Soviet system is described as having a high speed separation in the order of Mach 6 or 7. The article also describes a U.S. Air Force proposal having a modified Boeing 747 launch vehicle and a "comparatively low" separation altitude and velocity. With regard to separation velocity, it should be noted that the Jackson et al. patent cited above describes a system in which the separation velocity is about Mach 0.8, and Jackson et al. also mention that separation velocities in the range of Mach 2 to Mach 3.5 would require higher development costs but would yield lower recurring operating costs.

The known systems and the patents discussed above and the prior art cited in such patents should be carefully considered in order to put the present invention into proper perspective relative to the prior art.

DISCLOSURE OF THE INVENTION

A subject of the present invention is a horizontal-takeoff transatmospheric launch system. According to an aspect of the invention, the system comprises first and second stages including an aircraft and a transatmospheric vehicle, respectively. The aircraft has exterior surface portions that define a cavity opening onto bottom and aft portions of the aircraft. This cavity is dimensioned to receive the transatmospheric vehicle to integrate the vehicle into the underside of the aircraft. The system also includes means for releasably connecting the stages together, with the vehicle integrated into the underside of the aircraft, prior to takeoff, and for releasing the stages from each other during flight to allow each stage to continue independently on its own separate flight path.

A feature of the invention is the provision of each of the stages with landing gear arranged to make it possible to quickly and easily integrate the transatmospheric vehicle into the underside of the aircraft. The landing gear of each stage comprises a plurality of wheels for rolling the respective stage on the ground. The landing gear of the two stages is positioned and dimensioned so that, when each stage is supported on the ground on its respective landing gear, the second stage may be rolled on the wheels of its landing gear into a position in the cavity in which it is substantially integrated into the underside of the aircraft. This arrangement contributes greatly to minimizing the turn around time for the launch system and to making it possible to launch the transatmospheric vehicle on short notice. In addition, the arrangement makes it possible to integrate the transatmospheric vehicle into the aircraft without lifting the vehicle and without any need for elaborate mounting equipment.

Another feature of this invention is means for releasably connecting and releasing said stages that comprises a plurality of struts. Each strut has a first end pivotably connected to the aircraft and a second end pivotably connected to the transatmospheric vehicle The means for releasably connecting and releasing also includes means for releasably securing the vehicle against pivotal movement relative to the aircraft.

Preferably, each of the stages is provided with a rocket engine, and the means for releasably connecting and releasing includes means for automatically pivoting the stages away from each other in response to a thrust differential between the first and second stage rocket engines. In embodiments in which the means for releasably connecting and releasing includes a plurality of struts, the struts are preferably positioned to automatically pivot the stages away from each other in response to such a thrust differential.

Whenever each of the stages is provided with a rocket engine, it is preferable to also provide means for cross-feeding rocket fuel from the first stage to the second stage to ensure that the second stage carries a maximum amount of rocket fuel when the stages separate. A system with such cross-feeding means would generally also include means for disconnecting the cross-feeding means just prior to separation of the two stages.

According to another aspect of the invention, the launch system comprises first and second stages including an aircraft and a transatmospheric vehicle, respectively. Each stage includes a rocket engine The system has means for releasably connecting the stages together prior to takeoff, and for releasing the stages from each other during flight to allow each stage to continue independently on its own separate flight path. This means includes a plurality of struts each of which has a first end pivotably connected to the aircraft and a second end pivotably connected to the transatmospheric vehicle The struts are positioned to automatically pivot the stages away from each other in response to a thrust differential between the first and second stage rocket engines.

Preferably, the means for releasably connecting and releasing also includes means for automatically disconnecting the second end of each strut from the transatmospheric vehicle upon a predetermined amount of pivotal movement of the vehicle with respect to the aircraft. In the preferred embodiment, the second end of each strut defines a generally longitudinal slot with an

open end. The vehicle has a plurality of pins mounted thereon. Each of these pins is received into one of the slots to connect the vehicle to the respective strut. The pins and slots are positioned and dimensioned so that the pins will automatically slide out of the open ends of the slots upon a predetermined amount of pivotal movement of the vehicle with respect to the aircraft, to automatically release the vehicle from the aircraft. This arrangement has the advantages of being relatively easy and inexpensive to manufacture and of providing an essentially fail-safe release of the vehicle from the struts.

Another subject of the invention is a method of launching a transatmospheric vehicle. According to an aspect of the invention, the method comprises providing an aircraft of the type having an air breathing engine and providing the aircraft with a cavity opening onto bottom and aft portions of the aircraft. The transatmospheric vehicle is integrated into the underside of the aircraft by moving the vehicle into the cavity. The aircraft and the vehicle are releasably connected together. The vehicle is releasably secured in a position in the cavity in which it is integrated into the underside of the aircraft. The air breathing engine of the aircraft is operated to accomplish a horizontal takeoff of the integrated aircraft and vehicle. The integrated aircraft and vehicle are flown to a predetermined velocity and altitude. Upon reaching such predetermined velocity and altitude, the aircraft and vehicle are released from each other, and the aircraft and vehicle are flown independently of each other.

Preferably, the method further comprises providing each of the aircraft and the vehicle with a rocket engine, and the flying to a predetermined velocity and altitude includes igniting these rocket engines and climbing to such predetermined velocity and altitude. Also preferably, while flying to such velocity and altitude and before igniting the rocket engines, the air breathing engine is operated and the aircraft is turned as necessary to orient the vehicle into a desired orbit inclination and to offset the vehicle to a desired azimuth. This feature of turning the aircraft under air breathing engine power makes it possible to attain the flexibility in choice of orbit without time or weight penalties that is a major goal of the invention.

The step of releasing the aircraft and the vehicle from each other may be accomplished in a number of ways. Preferably, the thrust of the aircraft rocket engine is reduced to provide a thrust differential between the aircraft rocket engine and the rocket engine of the transatmospheric vehicle. The thrust differential is allowed to cause the aircraft and the vehicle to pivot away from each other. This manner of releasing the vehicle has the advantages of operating almost automatically and of making separation possible without the need for a power source other than the rocket engines.

It is of course preferable that the transatmospheric vehicle have full or nearly full fuel tanks when it separates from the aircraft. Therefore, whenever the rocket engine of such vehicle is operated before separation, the method preferably includes cross-feeding rocket fuel from the aircraft to the vehicle to ensure that the vehicle carries a maximum amount of rocket fuel when the aircraft and the vehicle separate. This helps to maximize the vehicle's capabilities in attaining orbit and in carrying out its mission once the desired orbit has been reached.

According to another aspect of the invention, the method comprises providing an aircraft of the type having landing gear and an air breathing engine and providing the aircraft with a cavity opening onto bottom and aft portions of the aircraft. The transatmospheric vehicle is provided with landing gear. Each of the aircraft and the vehicle is supported on the ground on its landing gear, and the aircraft and vehicle are aligned with the vehicle spaced aftwardly of the aircraft. While maintaining the aircraft and the vehicle so supported and aligned, the vehicle is moved forwardly toward the aircraft and into the cavity. The aircraft and vehicle are releasably connected together and the vehicle is releasably secured in position in the cavity, to integrate the vehicle into the underside of the aircraft. The air breathing engine is operated to accomplish a horizontal takeoff of the integrated aircraft and vehicle. The integrated aircraft and vehicle are flown to a predetermined velocity and altitude. Upon reaching such velocity and altitude, the aircraft and vehicle are released from each other and flown independently of each other.

The transatmospheric vehicle is preferably moved into the cavity by being towed with a ground vehicle. This procedure is simple and easy to carry out and does not require any equipment other than that normally found on an airfield. After the aircraft and transatmospheric vehicle have been connected together and the vehicle has been secured in position and before the integrated aircraft and vehicle takes off, the landing gear of the transatmospheric vehicle may be retracted. This makes it possible for the integrated aircraft and vehicle to take off on the landing gear of the aircraft alone. Thus, the landing gear of the transatmospheric vehicle is used only for landing such vehicle when it is separated from the aircraft, and the vehicle landing gear need only meet the structural requirements for such separate landings.

According to another aspect of the invention, the method comprises providing an aircraft of the type having an air breathing engine and releasably connecting the aircraft and the transatmospheric vehicle together. The air breathing engine is operated to accomplish a horizontal takeoff of the connected aircraft and vehicle. The connected aircraft and vehicle are flown to a Mach number of about 2.5 to about 3.5 and an altitude sufficient to allow the vehicle to accomplish a predetermined mission. Upon reaching such Mach number and altitude, the aircraft and vehicle are released from each other and flown independently of each other. Maintaining the staging velocity in a range corresponding to a Mach number of about 2.5 to about 3.5 avoids the high staging Mach numbers of about Mach 10 characteristic of known systems and the consequent need for providing the aircraft with a structure capable of withstanding the high heating rates associated with such high Mach numbers. It is possible to build an aircraft capable of withstanding a staging Mach number not exceeding about 3.5 using known technology. Therefore, the design costs of such an aircraft may be kept at a minimum, and the aircraft may be made operational in the relatively near future.

Still another subject of the invention is a method of launching a transatmospheric vehicle of the type having a rocket engine. According to an aspect of the invention, the method comprises providing an aircraft and providing the aircraft with a rocket engine and a plurality of struts. Each of the struts has a first end pivotably connected to the aircraft. A second end of each strut is pivotably connected to the transatmospheric vehicle,

and the vehicle is releasably secured against pivotal movement relative to the aircraft. The aircraft and secured vehicle are flown to a predetermined Mach number and altitude. This flying of the aircraft and vehicle includes igniting the rocket engines of the aircraft and the vehicle. The thrust of the aircraft rocket engine is reduced to provide a thrust differential. The thrust differential is allowed to cause the aircraft and the vehicle to pivot away from each other. Then one end of each strut is released to allow the aircraft and vehicle to separate from each other and fly independently.

The method and apparatus of the present invention solve the problems discussed above in connection with vertical takeoff systems and known proposals for horizontal takeoff systems. The method and apparatus of the invention do not require the kind of complex, heavy, and expensive ground support equipment that is necessary to operate a vertical takeoff system. The ground support equipment required by the method and apparatus of the invention is relatively minimal and may conveniently and economically be made readily available at a large number of takeoff sites. The type of ground support equipment required, the physical characteristics of the two stages of the system, and the method of takeoff make it possible to accomplish a launch using the system of the invention from virtually any of the numerous major airports in the United States and other countries. The practicality of taking off from such airports is enhanced by the use of air breathing, turbojet engines for takeoff since, compared to known launch systems, such engines significantly reduce the noise and sonic boom effects on the airport and its environs.

The ability to use a large number of airports, in combination with the maneuvering capability of the aircraft before separation, gives the system almost unlimited flexibility in choice of orbit without incurring any time or weight penalties. From a given location, the transatmospheric vehicle may be launched into any orbit inclination and a wide range of azimuths. The offset capability to a desired azimuth can be further increased simply by ferrying the connected aircraft and transatmospheric vehicle from one airport to another, refueling, and then commencing the launch procedure.

The method and apparatus of the invention make it possible to launch a transatmospheric vehicle on very short notice. Because of its simplicity and ease of operation, the launching process itself requires a minimum amount of time. In addition, the lack of a need for elaborate ground support equipment and the easy mobility of the two stages make it possible to economically maintain the two stages ready for the launching process at all times and to rapidly ferry them to a desired launch site when the need arises. The rapid launch capability of the system is further enhanced by its relatively short turn around time. After separating from the orbit vehicle, the aircraft lands at an airfield and can be prepared for a subsequent launch of the same or a different transatmospheric vehicle in a minimum amount of time.

The method and apparatus of the invention also provide significant reductions in the cost of maintaining a launch system. The system of the invention is designed to provide two stages that are both totally recoverable and reusable with a minimum amount of maintenance and refurbishment. Thus, the recurring costs are greatly reduced. The method and apparatus of the invention are also designed to make it possible for the first stage and at least most of the second stage to be constructed using existing technology. This not only reduces projected development costs but also makes a relatively near projected completion date realistic.

The invention also makes it possible to attain the very important goal of providing the capacity to launch a positive payload in a horizontal takeoff system. This capacity for launching a positive payload, in combination with the other advantages of the system of the invention discussed above, makes the system of the invention highly suitable for accomplishing a wide range of missions Such missions include both commercial and military missions, from routine missions that are scheduled well in advance to emergency triggered missions that must be carried out on very short notice.

The system of the invention is described above as preferably including the feature of providing each of the aircraft and the transatmospheric vehicle with a rocket engine. This feature is included in the first preferred embodiment of the invention. In other embodiments of the invention, there may be other arrangments and types of engines. For example, in the second preferred embodiment of the invention, the main engine of the transatmospheric vehicle is a scramjet, rather than a rocket engine.

The second preferred embodiment may include the additional features discussed above and has substantially the same advantages discussed above. The choice between the two embodiments would depend on a number of factors. The major advantage of the first preferred embodiment over the second embodiment is that rocket engine technology is more highly developed than scramjet technology, and therefore, development costs of the first embodiment would be lower and an earlier completion date for the first embodiment could be attained. One of the advantages of the second preferred embodiment over the first embodiment is that the second embodiment makes it possible to optimize the speed and trajectory for each type of engine. In addition, the second preferred embodiment has the potential for increasing the payload capacity of the system. Although a scramjet engine is generally heavier than a rocket engine, the overall system using a scramjet would be lighter than a system using a rocket engine because the scramjet obtains oxygen for combustion from the surrounding atmosphere whereas liquid oxygen must be carried by a rocket engine powered vehicle.

In order to optimize the speed and trajectory for each type of engine, the method of launching a transatmospheric vehicle preferably comprises providing an aircraft of a type having an air breathing engine, providing the aircraft with a rocket engine, and providing the transatmospheric vehicle with a scramjet engine. The aircraft and transatmospheric vehicle are releasably connected, and the air breathing engine is operated to accomplish a horizontal takeoff of the connected aircraft and vehicle. After takeoff, the method includes igniting the rocket engine and accelerating to a Mach number of about 3.3 and climbing to an altitude sufficient to allow the transatmospheric vehicle to attain orbit and accomplish a predetermined mission. While the connected vehicles are accelerating and climbing, the scramjet engine is ignited. Upon reaching said Mach number and altitude, the aircraft and vehicle are released from each other and flown independently of each other.

A method aspect of the invention discussed above includes supporting the transatmospheric vehicle on its

landing gear and moving it forwardly toward the aircraft and into the cavity in the aircraft. This aspect of the invention preferably further includes retracting the landing gear of the transatmospheric vehicle after connecting the aircraft and vehicle together and securing the vehicle in position, fueling the vehicle by cross-feeding fuel from the aircraft to the vehicle after retracting the landing gear of the vehicle, and operating the air breathing engine to accomplish takeoff after fueling the vehicle. These steps enhance the advantage of minimizing the structural requirements for the landing gear of the vehicle. Such landing gear need only be sized for rolling the vehicle on the ground and landing the vehicle when the vehicle is not carrying the weight of fuel. This minimizes the structural requirements for the landing gear and, thus, makes it possible to minimize the weight of the landing gear. This preferred procedure also helps to further simplify launch preparation and reduce turn around time.

These and other advantages and features of the invention will become apparent from the detailed description of the best modes for carrying out the invention that follows.

BRIEF DESCRIPTION OF THE DRAWINGS

In the drawings, like element designations refer to like parts throughout, and:

FIG. 1 is a pictorial view of the booster aircraft flying by itself.

FIG. 2 is a pictorial view of the orbiter vehicle flying by itself..

FIG. 3 is a pictorial view of the booster aircraft flying with the orbiter vehicle integrated into its underside.

FIG. 4 is a top plan view of the booster aircraft.

FIG. 5 is a top plan view of the orbiter vehicle.

FIG. 6 is an elevational view of the booster aircraft with the orbiter vehicle integrated into its underside.

FIG. 7 is a pictorial view showing the booster aircraft and orbiter vehicle on the ground and in alignment ready to be integrated together.

FIG. 8 is like FIG. 7 except that it shows the orbiter vehicle being towed into the cavity in the booster aircraft.

FIG. 9 is like FIG. 8 except that it shows the orbiter vehicle all the way in position in the cavity.

FIG. 10 is a schematic representation of the flight profiles of the booster aircraft and orbiter vehicle.

FIG. 11/is an elevational view of the booster aircraft and orbiter vehicle at the beginning of the takeoff operation.

FIG. 12 is an elevational view of the booster aircraft and orbiter vehicle at ignition of the booster aircraft and orbiter vehicle rocket engines.

FIG. 13 is an elevational view of the booster aircraft and orbiter vehicle as the orbiter vehicle is swinging out of the cavity in the booster aircraft.

FIG. 14 is a detail of one of the strut ends shown in FIG. 13.

FIG. 15 is an elevational view of the booster aircraft and orbiter vehicle just after separation.

FIG. 16 is a detail of one of the strut ends and associated pins shown in FIG. 15.

FIG. 17 is a schematic representation of the fuel systems of the booster aircraft and the orbiter vehicle and their interconnection.

FIG. 18 is a side elevational view of a second preferred embodiment of the booster aircraft and orbiter vehicle integrated together.

FIG. 19 is a rear elevational view of the aircraft and vehicle shown in FIG. 18.

FIG. 20 is a top plan view of the aircraft and orbiter shown in FIGS. 18 and 19.

FIG. 21 is a side elevational view of the orbiter vehicle shown in FIGS. 18 and 19.

FIG. 22 is a top plan view of the vehicle shown in FIG. 21.

FIG. 23 is a vertical sectional view of a portion of the vehicle shown in FIGS. 21 and 22, including its scramjet engine.

BEST MODES FOR CARRYING OUT THE INVENTION

The drawings show two embodiments of a horizontal-takeoff transatmospheric launch system that are constructed according to the invention and that also constitute the best modes of the invention currently known to the applicant. In addition to showing the apparatus of the invention, the drawings illustrate the best modes of the method of the invention currently known to the applicant. The system of the invention is a two-stage launch system in which a transatmospheric orbiter vehicle is releasably connected to a booster aircraft for a horizontal takeoff. Following takeoff, the booster carries the orbiter to a staging altitude and velocity at which the booster and orbiter are separated. Following separation, the booster makes a conventional horizontal landing and the orbiter continues on to its transatmospheric mission. Upon completing its mission, the orbiter reenters the atmosphere and makes an unpowered conventional horizontal landing.

In the preferred embodiment, the first stage of the system, the booster aircraft 2, is designed for a two-person crew. The aircraft 2 has a delta wing 8 that is mounted high on the fuselage to provide clearance for the second stage, the transatmospheric orbiter vehicle 50. A vertical tail 10 is mounted on each wing tip of the aircraft 2 to provide directional stability. The fuselage of the aircraft 2 has a cavity 4 that opens onto bottom and aft portions of the fuselage. The cavity 4 is essentially symmetrical about the longitudinal centerline of the aircraft 2. The cavity 4 is defined by exterior surfaces of the aircraft 2 including the underside of the center portion of the wing 8 and a generally U-shaped, generally vertical wall 5. The cavity 4 is dimensioned to receive the transatmospheric vehicle 50 to integrate the vehicle 50 into the underside of the aircraft 2. The wing 8 is provided with two slots 6 to accommodate the vertical tails 52 of the vehicle 50.

The aircraft 2 is powered by eight air breathing engines 20. These engines 20 are mounted in two pods of four engines 20 each. The pods are positioned outboardly of the cavity 4 on either side of the cavity 4. The engines 20 are of an advanced type that provides augmented air breathing power. An example of a suitable engine for use in the aircraft 2 is the engine made by the General Electric Company and having a model number of F101-GE-102. The augmented power will be supplied by afterburners which in turn supply augmented thrust. The air breathing fuel tanks 21 are located in the outboard portions of the wing 8 to reduce the total wing bending moments at the side of the body.

The aircraft 2 is also provided with a rocket engine 22. This engine 22 is located above the aft portion of the cavity 4. Like the air breathing engines 20, the rocket engine 22 may be of a type currently available. At the present, it is anticipated that the rocket engine will be

the existing SSME (space shuttle main engine) currently used on the space shuttle. This engine is made by Rockwell International, Rockadyne Division. The rocket engine **22** uses liquid oxygen/liquid hydrogen propellants. The liquid hydrogen tanks **24** are located in the main portion of the fuselage behind the crew compartment and may be made an integral part of the structure of the aircraft **2**. The liquid oxygen tanks **26** are also located in the fuselage just aft of the liquid hydrogen tanks **24**. See FIG. **4**.

Referring to FIG. **7**, the aircraft **2** has landing gear **12** for horizontal takeoffs and landings. The landing gear **12** includes two main struts **14**, each of which carries a truck of eight wheels **16**. The landing gear **12** also includes a nose gear portion **17** that carries a truck of four wheels **18**. The eight wheeled main landing gear units **14, 16** are located outboardly of the cavity **4** and are integral with and retract forwardly into the nacelles on either side of the cavity **4**. The nose gear **17** is mounted forward of the liquid hydrogen tanks and retracts rearwards into a position below the liquid hydrogen tanks **24**.

The launch system of the invention in general, and the aircraft **2** in particular, are designed so that the aircraft **2** may be manufactured using known technology. It is anticipated that most of the structure of the aircraft **2** will be made from composite materials such as graphite/epoxy and graphite/polyimide. Portions of the aircraft **2**, such as the liquid oxygen and liquid hydrogen tanks, will preferably be made from aluminum. Surfaces of the aircraft, like the tip of the nose and the leading edges of the wing, that will be subjected to a high level of thermal stress may be provided with titanium for thermal stress relief.

The orbiter vehicle **50** is also designed for a two-person crew. The vehicle **50** of the preferred embodiment has a delta wing **54** that is mounted low on the body of the vehicle **50** to facilitate mating with the aircraft **2**. Each side of the wing **54** has a "break" **56** (a change in the planform angle of the leading edge) in order to provide clearance for the aircraft main landing gear **14, 16** when the aircraft **2** and vehicle **50** are mated. The vehicle **50** has twin vertical tails **52** for directional stability. These tails **52** are mounted on the aft end of the body.

The vehicle **50** is powered by a rocket engine **66** that is mounted on the aft end of the body, as is most clearly shown in FIGS. **2** and **7–9**. This engine **66**, like the rocket engine **22** of the aircraft **2**, may be the existing SSME currently used on the space shuttle. The vehicle **50** also has four orbital maneuvering rocket engines **68**, two mounted on each side of the main rocket engine **66**. Engines suitable for use as the orbital maneuvering rocket engines **68** are currently in use. These are the model RL-10 engines manufactured by Pratt Whitney of United Aircraft. The engines **66, 68** of the vehicle **50** use liquid hydrogen and liquid oxygen propellants. The liquid hydrogen is carried in a forward tank **72** located in the body of the vehicle **50** just aft of the nose, and two saddle tanks **74** located aft of the forward tank **72** and on either side of the payload bay **70**. The liquid oxygen tanks **76** are provided as an integral part of the two sides of the delta wing **54**. See FIG. **5**.

The vehicle **50** is provided with landing gear **58** for horizontal landings. The landing gear **58** includes two main struts **60** that are mounted on and retracted into the wing structure. The gear **58** also includes nose gear **62** located below the crew compartment. Each of the three elements of the gear **58** is provided with two wheels **64**. The main landing gear **60** is sized for landing weights only. See FIG. **7**.

As noted above, in the preferred embodiment the orbiter vehicle **50** is received into the cavity **4** in the aircraft **2** and integrated into the underside of the aircraft **2** for transport to the staging velocity and altitude. The vehicle **50** is connected to the aircraft **2** in an underslung manner in order to eliminate the need for ground support mating equipment and to facilitate separation of the vehicle **50** from the aircraft **2**. The vehicle **50** is releasably connected to the aircraft **2** by means of a plurality of struts **30, 32**. In the preferred embodiment shown in the drawings, there are four struts **30, 32**, two forward struts **30** and two aft struts **32**, one forward strut **30** and one aft strut **32** on each side of the cavity **4**. However, the number of struts may of course be varied without departing from the spirit and scope of the invention. Each strut **30, 32** has a first end **34** that is pivotably connected to the aircraft **2** inside the cavity **4** at a location near the juncture of the underside of the center portion of the wing **8** and the U-shaped wall **5**. When the vehicle **50** is moved into position in the cavity **4**, a second end **36** of each strut **30, 32** is pivotably and releasably connected to the vehicle **50**. Releasable latches **38** hold the struts **30, 32** in the mated position to secure the vehicle **50** against pivotal movement relative to the aircraft **2** until separation is to be accomplished. See FIG. **6**. These latches **38** may be of various known types, such as a collet restrained latch. Each strut **30, 32** is provided with an actuator **44** that serves to retract the strut **30, 32** back into the cavity **4** following separation of the vehicle **50** from the aircraft **2**. The actuators **44** may take any of a variety of known forms.

The separation procedure includes the pivoting of the vehicle **50** out of the cavity **4**. The vehicle **50** pivots on the struts **30, 32**. When the vehicle has pivoted to a position in which the struts **30, 32** are essentially perpendicular to the longitudinal center lines of both the vehicle **50** and the aircraft **2**, the vehicle **50** is released from the struts **30, 32** and separation is complete. Preferably, the second ends **36** of the struts **30, 32** are automatically disconnected from the vehicle **50**. The preferred means for accomplishing this automatic disconnection is shown in FIGS. **14** and **16**. The second end **36** of each strut **30, 32** is provided with a generally longitudinal slot **40** having an open end. A plurality of pins **42**, one corresponding to each strut **30, 32**, are mounted on the vehicle **50**. Each pin **42** is received into the slot **40** in the corresponding strut **30, 32** when the vehicle **50** is connected to the aircraft **2**. The pins **42** and slots **40** are positioned and dimensioned so that the pins **42** will automatically slide out of the open ends of the slots **40** when the vehicle **50** has completed its pivotal movement with respect to the aircraft **2** out of the cavity **4**. When the pins **42** slide out of the slots **40**, the vehicle **50** is automatically released from the aircraft **2** and is free to proceed independently to its orbital mission.

In addition to the structural connection between the aircraft **2** and the vehicle **50** provided by the struts **30, 32**, before separation the fuel systems of the aircraft **2** and vehicle **50** are interconnected to provide cross-feeding of rocket fuel from the aircraft **2** to the vehicle **50**. This cross-feeding ensures that the vehicle **50** has essentially full fuel tanks and carries a maximum amount of rocket fuel when the two stages **2, 50** separate. FIG. **17** is a schematic view of the rocket fuel systems of the aircraft **2** and vehicle **50** and the cross-feeding means.

As can be seen in FIG. 17, a fuel line 25 from the aircraft liquid hydrogen tanks 24 communicates with a conduit in a coupling 88 for transfer to the vehicle 50 This coupling 88 is located on an exterior surface in the cavity 4. A shut-off valve 86 is provided to seal off the line 25 when the separation procedure commences. Similarly, a fuel line 28 from the liquid oxygen tanks 26 communicates with a separate conduit in the coupling 88 for transfer to the vehicle 50 Line 28 has a shut-off valve 82. The coupling 88 on the aircraft 2 mates with a coupling 90 on an exterior surface of the vehicle 50. Together, couplings 88, 90 form a releasable connection which may be of various known types, such as a poppet valve connection with restraints. Conduits 96, 98 from the coupling 90 feed the fuel to the main rocket engine 66 of the vehicle 50. These conduits are provided with shut-off valves 92, 94 to close off the coupling 90 when the vehicle 50 is separated from the aircraft 2.

In operation, each of the aircraft 2 and vehicle 50 is towed onto a preparation pad at an airfield launch site. The aircraft 2 and vehicle 50 are supported on their respective landing gear 12, 58, and their longitudinal center lines are aligned with the vehicle 50 spaced aftwardly of the aircraft 2. See FIG. 7. While maintaining the aircraft 2 and vehicle 50 aligned and supported on their landing gear 12, 58, the vehicle 50 is towed forwardly by a ground tow vehicle 100 toward the aircraft 2 and into the cavity 4. See FIG. 8. In order to facilitate the mating of the aircraft 2 and vehicle 50, the landing gear 12, 58 is positioned and dimensioned so that when each stage 2, 50 is supported on the ground on its respective landing gear 12, 58, the orbiter vehicle 50 may be rolled on the wheels 64 of its landing gear 58 directly into a position in the cavity 4 in which it is substantially integrated into the underside of the aircraft 2. Thus, the vehicle 50 need only be rolled into position, and no ground support equipment for lifting the vehicle 50 is required

When the vehicle 50 has been rolled into the cavity 4, the vehicle 50 is releasably connected to the aircraft 2 by sliding the pins 42 into the slots 40 on the outer ends 36 of the struts 30, 32. The vehicle 50 is releasably secured in position in the cavity 4 by the latches 38 mentioned above, and the cross-feed couplings 88, 90 are connected. The vehicle 50 is then fully integrated into the underside of the aircraft 2, and the landing gear 58 of the vehicle 50 may be retracted See FIG. 9.

With the landing gear of the vehicle 58 retracted, the integrated aircraft 2 and vehicle 50 is rolled on the landing gear 12 of the aircraft 2 onto a runway for a conventional horizontal takeoff. See FIG. 11. FIG. 10 illustrates in schematic form the flight paths of the integrated aircraft 2 and vehicle 50 and of each independent stage 2, 50 after separation. Following takeoff, the aircraft 2 is operated like a conventional aircraft. Under air breathing engine power, the aircraft is turned as necessary to orient the vehicle 50 into a desired orbit inclination and to offset the vehicle 50 to a desired azimuth As discussed above, this maneuvering operation provides the launch system with flexibility in choice of orbit without time or weight penalties. In addition, the maneuvering under air breathing power is far more efficient than maneuvering under rocket power would be and permits the desired orbit to be attained without the expenditure of any rocket fuel.

The aircraft 2, with the orbiter vehicle 50 integrated into its underside, flies under air breathing power to an altitude of, for example, 30,000 feet and a Mach number of about 0.85. With the aircraft 2 oriented at an angle of about 5° to the local horizon, the rocket engines 22, 66 of the aircraft 2 and vehicle 50 are ignited The ignition of the rocket engines 22, 66 is illustrated in FIG. 12. When the engines 22, 66 have been ignited, the aircraft 2 goes into an accelerate climb under air breathing and rocket power. The aircraft 2 climbs to the separation conditions. These conditions must include a Mach number that can be withstood by the structure of the aircraft 2 and an altitude that is sufficient to allow the vehicle 50 to accomplish its transatmospheric mission. Examples of conditions suitable for the preferred embodiment are an altitude of 103,800 feet and a Mach number of 3.3. Upon reaching the separation conditions, the procedure for separating the vehicle 50 from the aircraft 2 is commenced.

The separation procedure is illustrated in FIGS. 13–16. While the orbitor 50 maintains maximum thrust, the rocket engine 22 of the aircraft 2 is step throttled to reduce the thrust of the engine 22; i.e., the engine 22 is gradually shut off. The shut-off is carried out gradually rather than all at once in order to ensure that the shut-off is smooth and that the aircraft 2 and vehicle 50 are not subjected to destabilizing forces caused by a sudden shut-off. The valves 82, 86, 92, 94 in the rocket fuel cross-feeding system are closed. The latches 38 are released to in turn release the struts 30, 32 and the vehicle 50 from any restraint against pivotal movement out of their stowed integrated positions. The couplings 88, 90 are pulled apart and automatically disconnected from each other when the vehicle 50 begins to move away from the aircraft 50.

The reduction in the thrust of the aircraft rocket engine 22 creates a thrust differential between engine 22 and the orbiter main rocket engine 66. The launch system is designed so that the aircraft 2 and vehicle 50 are automatically pivoted away from each other in response to this thrust differential. The struts 30, 32 and their connections to the aircraft 2 and vehicle 50 are positioned so that the vehicle 50 will automatically pivot on the struts 30, 32 in response to the thrust differential. The struts 30, 32 ensure controlled and safe movement of the vehicle 50 with respect to the aircraft 2. FIG. 13 shows the vehicle 50 in the process of pivoting out of the cavity 4. At this point in the operation, the attitude of the two vehicles 2, 50 is at about 33° to the local horizon. FIG. 14 is a detail of the second end 36 of one of the struts 30, 32 shown in FIG. 13. In the position shown in FIGS. 13 and 14, the pin 42 is exerting a pivotal force, a forward and downward force relative to the vehicle 50, on the strut 30, 32.

FIG. 15 shows the positions of the aircraft 2 and vehicle 50 just after the vehicle 50 separates from the struts 30, 32 and the aircraft 2. At separation, the vehicles 2, 50 are essentially parallel to each other, with the struts 30, 32 being perpendicular to the longitudinal axes of the vehicles 2, 50, and separation velocity is maximum. Just after separation, the angle of inclination with the local horizon of each vehicle 2, 50 is about 40°. FIG. 16 is a detail of the second end 36 of one of the struts 30, 32 shown in FIG. 15 and its associated pin 42. As is illustrated in FIG. 16, when the struts 30, 32 and vehicle 50 reach their separation positions, each pin 42 automatically slides out of its associates strut end 36.

Following separation, the aircraft 2 coasts on up to an altitude of about 127,000 feet and then glides with its air breathing engines 20 idling and descends to an optimum cruise altitude. Then, power is increased, and the air-

craft 2 flies under air breathing power to a horizontal landing at an airfield. The vehicle **50** proceeds under the power of its main rocket engine **66** to orbit. The procedures for entering the desired orbit, operating while in orbit, and reentering the atmosphere are essentially the same as the procedures followed by the current space shuttle. Following reentry, the vehicle **50** glides in the atmosphere and makes an unpowered horizontal landing, also like the current space shuttle. The vehicle **50** may then be prepared for another launch.

FIGS. **18–23** show a second preferred embodiment of the invention. The major difference between the second preferred embodiment and the first preferred embodiment described above is that, in the second preferred embodiment, the rocket engine **66** of the orbiter vehicle **50** of the first embodiment is replaced by a scramjet engine **101**. The relative merits of the two embodiments are discussed above. Both embodiments have the advantage of eliminating the need for carrying heavy landing gear, turbojet engines, and wing area sized for takeoff to orbit.

Referring to FIGS. **18–20**, the aircraft **2'** of the second preferred embodiment has a configuration similar to the configuration of the aircraft **2** of the first embodiment. The aircraft **2'** has a delta wing **8'** and a vertical tail **10'** on each of the wing tips. As in the first embodiment, the aircraft **2'** is provided with eight air breathing engines **20'** arranged in two pods of four engines **20'** each. The engines **20'** are preferably of the same type as the engines **20** of the first embodiment. The aircraft **2'** has two rocket engines **22'**, rather than the single rocket engine **22** of the first embodiment. These engines **22'** are preferably of the same type as the rocket engine **22** of the first embodiment. Between the two rocket engines **22'**, a slot **6'** is provided to accommodate the single vertical tail **52'** of the orbiter vehicle **50'**.

The orbiter vehicle **50'** of the second embodiment has a delta wing **54'** and a single vertical tail **52'** positioned on the top of the rear portion of its fuselage **102**. The orbiter vehicle **50'** is provided with one or more orbital maneuvering rockets **68'**, preferably of the same type as the maneuvering rockets **68** of the first embodiment. As shown in FIG. **19**, in the second preferred embodiment a single maneuvering rocket **68'** is provided. If the payload to be carried by the orbiter **50'** is to be larger, a second maneuvering rocket may also be provided.

The main engine of the orbiter **50'** is a supersonic combustion ramjet, also known as a scramjet **101**. Scramjet engine technology is discussed in an article by T. A. Heppenheimer, "Scramjets That Will Reach Mach 25", in the April 1986 issue of Popular Science, pages 94–97, 136, and 138, and in the Spring 1986 issue of Space Markets magazine, page 31, "Technology Challenges Ahead". The scramjet engine **101** of the second preferred embodiment is basically a rectangular tube the top of which is formed by the fuselage **102** of the orbiter **50'**.

FIG. **23** is a simplified vertical sectional view of the type of scramjet engine that is currently preferred for inclusion in the second embodiment. The engine **101** includes an upper plate **104** and a lower plate **106**. To provide the engine with variable geometry to adjust it to a range of Mach numbers, the upper plate **104** is movable longitudinally and vertically by suitable mechanisms (not shown). The forward and rear portions of the tube that forms the engine **101** are open to form an inlet **108**, and the outlet of a nozzle **116**. The geometry of the engine **101** is adjusted so that the shock wave of the inflowing air just hits the lip **110** of the inlet **108**. The inflowing air decelerates to a lower supersonic speed as it moves into the throat portion of the engine **101**. At the throat portion, fuel jets **112** inject fuel into the stream of air, and the fuel is burned in the combustion zone **114**.

In the second preferred embodiment, the orbiter **50'** is integrated into the underside of the aircraft **2'** in the same manner that the orbiter **50** of the first embodiment is integrated into the aircraft **2**. The procedure for preparing for a launch in each of the two embodiments is also essentially the same. In each case, the aircraft **2, 2'** and the orbiter **50, 50'** are preferably connected and secured together before fueling. When the orbiter **50, 50'** has been secured in place, the landing gear of the orbiter **50, 50'** is retracted, and then both the aircraft **2, 2'** and the orbiter **50, 50'** are fueled. The fueling of the orbiter **50, 50'** is accomplished by cross-feeding fuel from the aircraft **2, 2'** to the orbiter **50, 50'**.

The takeoff and launch procedure following the fueling of the aircraft **2, 2'** and orbiter **50, 50'** is the same in both embodiments up until the point where the rocket engines are ignited. In the second preferred embodiment, at a Mach number of about 0.85 and an altitude of about 30,000 feet, the aircraft **2'** assumes the orientation discussed above in connection with the firing of the rockets in the first embodiment, and the two rockets **22'** of the aircraft **2'** are ignited. The connected aircraft **2'** and orbiter **50'** then accelerate and climb to a Mach number of about 2.5 and an altitude of about 80,000 feet. At this point, the scramjet engine **101** is ignited, and the connected aircraft **2'** and orbiter **50'** continue to climb and accelerate. When the aircraft **2'** and orbiter **50'** reach a velocity of about Mach 3.3 and an altitude of about 90,000 feet, the rocket engines **22'** are step throttled, as described above, to provide a thrust differential. This thrust differential causes the orbiter **50'** to pivot away from and separate from the aircraft **2'**, as described above.

Following separation, the orbiter **50'** continues to climb and accelerate to an altitude of about **40** miles and a velocity somewhat higher than orbital velocity. For example, a typical orbital velocity would be about 25,700 feet per second, in which case the orbiter **50'** would accelerate to about 26,200 feet per second. Beyond an altitude of about 40 miles, there is insufficient atmosphere for the scramjet **101** to function. Therefore, the scramjet **101** is shut down at an altitude of about 40 miles, and the orbiter **50'** coasts to the orbital altitude of about 100 miles. As the orbiter **50'** coasts, it loses some velocity. After the orbiter **50'** reaches its orbital altitude, the maneuvering rocket **68'** is ignited to circularize the orbit. The procedures following attainment of orbit are the same in both embodiments.

As noted above, the second preferred embodiment of the invention has the advantage of optimizing the speed and trajectory for each type of engine. Ramjets have the advantage of operating very efficiently at hypersonic speeds. However, ramjets cannot operate efficiently at subsonic speeds, and efficient operation over a wide range of speeds from low supersonic to hypersonic can only be attained at the cost of significant weight penalties. The weight penalties are the result of a need for the engine to have a high degree of variable geometry. Scramjets that operate only at hypersonic speeds have the significant advantage of requiring significantly less variable geometry and, therefore, have a significant

weight advantage over engines designed for a wide range of supersonic and hypersonic speeds.

A major advantage of the second preferred embodiment of the invention is that it maximizes the overall propulsion efficiency of the system by optimizing the speed at which each of the engines is operated. The scramjet is efficient in a range of about Mach 3 to about Mach 25. In the second preferred embodiment, the scramjet **101** is ignited just before its efficient range is attained, and separation and separate flight of the orbiter **50'** are carried out within the efficient range. Thus, the choice of a staging velocity slightly higher than Mach 3 has the advantage of maximizing the efficient use of the scramjet **101** as well as the advantages of providing a high enough initial altitude and velocity for the orbiter **50'** to attain orbit without an unreasonable fuel consumption and of maintaining a low enough velocity to minimize the heat protection and flyback range requirements for the aircraft **2'**.

Throughout this description and the claims that follow, the term "fly" is used to indicate movement in both the usual sense of navigation in the air supported by the dynamic action of the air against the surfaces of a craft and in the sense of movement beyond the atmosphere of a transatmospheric vehicle.

It will be obvious to those skilled in the art to which this invention is addressed that the invention may be used to advantage in a variety of situations. Therefore, it is also to be understood by those skilled in the art that various changes, modifications, and omissions in form and detail may be made without departing from the spirit and scope of the invention as defined by the following claims.

What is claimed is:

1. A horizontal-takeoff transatmospheric launch system comprising:

first and second stages including an aircraft and a transatmospheric vehicle, respectively; said aircraft including top and side portions having downwardly and laterally inwardly facing exterior surface portions defining a cavity opening onto bottom and aft portions of the aircraft; and said cavity being dimensioned to receive the transatmospheric vehicle, with substantially the entire upper surface of said vehicle enclosed by said exterior surface portions, to integrate said vehicle into the underside of the aircraft; and

means for releasably connecting said stages together, with said vehicle integrated into said underside, prior to takeoff, and for releasing said stages from each other during flight to allow each stage to continue independently on its own separate flight path and the transatmospheric vehicle to proceed to orbit;

said top and side portions forming a continuous load-bearing structure for carrying aircraft loads and the weight of the connected transatmospheric vehicle.

2. A system as described in claim **1**, in which each of said stages includes landing gear comprising a plurality of wheels for rolling the respective stage on the ground; said landing gear of said stages being positioned and dimensioned so that, when each stage is supported on the ground on its respective landing gear, the second stage may be rolled on the wheels of its landing gear into a position in said cavity in which it is substantially integrated into the underside of the aircraft.

3. A system as described in claim **1**, in which the means for releasably connecting and releasing said stages comprises a plurality of struts each having a first end pivotably connected to the aircraft and a second end pivotably connected to the transatmospheric vehicle, and means for releasably securing said vehicle against pivotal movement relative to the aircraft.

4. A system as described in claim **3**, in which said means for releasably connecting and releasing further includes means for automatically disconnecting said second end of each strut from said vehicle upon a predetermined amount of pivotal movement of said vehicle with respect to the aircraft.

5. A system as described in claim **3**, in which said second end of each strut defines a generally longitudinal slot with an open end; said vehicle has a plurality of pins mounted thereon each of which is received into one of said slots to connect said vehicle to the respective strut; and said pins and slots are positioned and dimensioned so that the pins will automatically slide out of the open ends of the slots upon a predetermined amount of pivotal movement of said vehicle with respect to the aircraft, to automatically release said vehicle from the aircraft.

6. A system as described in claim **2**, in which each of the stages includes an engine; and which further comprises means for cross-feeding fuel from the first stage to the second stage to ensure that the second stage carries a maximum amount of fuel when the stages separate, and means for disconnecting said means for cross-feeding just prior to separation of the two stages.

7. A system as described in claim **1**, in which each of the stages includes an engine, and said means for releasably connecting and releasing comprises means for allowing the second stage to automatically pivot away from the first stage in response to a thrust differential between the first and second stage engines created by reducing the thrust of the first stage engine while maintaining the thrust of the second stage engine.

8. A system as described in claim **3**, in which each of the stages includes an engine, and said struts are positioned to allow the second stage to automatically pivot away from the first stage in response to a thrust differential between the first and second stage engines created by reducing the thrust of the first stage engine while maintaining the thrust of the second stage engine.

9. A system as described in claim **4**, in which each of the stages includes an engine, and said struts are positioned to allow the second stage to automatically pivot away from the first stage in response to a thrust differential between the first and second stage engines created by reducing the thrust of the first stage engine while maintaining the thrust of the second stage engine.

10. A system as described in claim **5**, in which each of the stages includes an engine, and said struts are positioned to allow the second stage to automatically pivot away from the first stage in response to a thrust differential between the first and second stage engines created by reducing the thrust of the first stage engine while maintaining the thrust of the second stage engine.

11. A system as described in claim **8**, in which each of the stages includes landing gear comprising a plurality of wheels for rolling the respective stage on the ground, said landing gear of said stages being positioned and dimensioned so that, when each stage is supported on the ground on its respective landing gear, the second stage may be rolled on the wheels of its landing gear into a position in the cavity in which it is substantially integrated into the underside of the aircraft.

12. A system as described in claim 11, which further comprises means for cross-feeding fuel from the first stage to the second stage to ensure that the second stage carries a maximum amount of fuel when the stages separate, and means for disconnecting said means for cross-feeding just prior to separation of the two stages.

13. A method of launching a transatmospheric vehicle, comprising:

providing an aircraft of the type having an air breathing engine;

providing the aircraft with top and side portions that form a continuous load-bearing structure having downwardly and laterally inwardly facing exterior surface portions that define a cavity opening onto bottom and aft portions of the aircraft;

integrating the transatmospheric vehicle into the underside of the aircraft by moving said vehicle into the cavity, releasably connecting the aircraft and said vehicle together, and releasably securing said vehicle in a position in the cavity in which it is integrated into said underside and substantially its entire upper surface is enclosed by said exterior surface portions;

allowing said load-bearing structure to carry aircraft loads and the weight of the connected transatmospheric vehicle;

operating said engine to accomplish a horizontal takeoff of the integrated aircraft and vehicle;

flying the integrated aircraft and vehicle to a predetermined velocity and altitude; and

upon reaching said predetermined velocity and altitude, releasing the aircraft and said vehicle from each other, and flying the aircraft and said vehicle independently of each other and said vehicle into orbit.

14. A method as described in claim 13, which further comprises providing each of the aircraft and said vehicle with a high velocity engine, and in which the step of flying to a predetermined velocity and altitude includes igniting said high velocity engines and climbing to said predetermined velocity and altitude.

15. A method as described in claim 14, in which the step of flying to a predetermined velocity and altitude includes, before igniting said high velocity engines, operating said air breathing engine and turning the aircraft as necessary to orient said vehicle into a desired orbit inclination and to offset said vehicle to a desired azimuth.

16. A method as described in claim 14, in which the step of releasing the aircraft and said vehicle from each other includes reducing the thrust of the aircraft high velocity engine while maintaining the thrust of the high velocity engine of said vehicle to provide a thrust differential between the aircraft high velocity engine and the high velocity engine of said vehicle, and allowing the thrust differential to cause the aircraft and said vehicle to pivot away from each other.

17. A method as described in claim 14, further comprising cross-feeding fuel from the aircraft to said vehicle to ensure that said vehicle carries a maximum amount of fuel when the aircraft and said vehicle separate.

18. A method as described in claim 16, further comprising cross-feeding fuel from the aircraft to said vehicle to ensure that said vehicle carries a maximum amount of fuel when the aircraft and said vehicle separate.

19. A method as described in claim 13, in which the step of releasing the aircraft and said vehicle from each other is carried out upon reaching a Mach number of about 2.5 to about 3.5 and an altitude sufficient to allow said vehicle to attain orbit and accomplish a predetermined mission.

20. A method as described in claim 14, in which the step of releasing the aircraft and said vehicle from each other is carried out upon reaching a Mach number of about 2.5 to about 3.5 and an altitude sufficient to allow said vehicle to attain orbit and accomplish a predetermined mission.

21. A method as described in claim 20, further comprising cross-feeding rocket fuel from the aircraft to said vehicle to ensure that said vehicle carries a maximum amount of rocket fuel when the aircraft and said vehicle separate.

22. A method as described in claim 20, in which the step of flying to a predetermined velocity and altitude includes, before igniting said rocket engines, operating said air breathing engine and turning the aircraft as necessary to orient said vehicle into a desired orbit inclination and to offset said vehicle to a desired azimuth.

23. A method of launching a transatmospheric vehicle, comprising:

providing an aircraft of the type having landing gear and an air breathing engine;

providing the aircraft with top and side portions that form a continuous load-bearing structure having downwardly and laterally inwardly facing exterior surface portions that define a cavity opening onto bottom and aft portions of the aircraft;

providing the transatmospheric vehicle with landing gear;

supporting each of the aircraft and said vehicle on the ground on its landing gear, and aligning the aircraft and said vehicle with said vehicle spaced aftwardly of the aircraft;

while maintaining the aircraft and said vehicle so supported and aligned, moving said vehicle forwardly toward the aircraft and into the cavity;

releasably connecting the aircraft and said vehicle together and releasably securing said vehicle in position in the cavity, to integrate said vehicle into the underside of the aircraft;

allowing said load-bearing structure to carry aircraft loads and the weight of the connected transatmospheric vehicle;

retracting the landing gear of the transatmospheric vehicle after connecting the aircraft and the transatmospheric vehicle together and securing the transatmospheric vehicle in position;

after retracting the landing gear of said vehicle, fueling said vehicle by cross-feeding fuel from the aircraft to said vehicle;

after fueling said vehicle, operating said engine to accomplish a horizontal takeoff of the integrated aircraft and vehicle;

flying the integrated aircraft and vehicle to a predetermined velocity and altitude; and

upon reaching said predetermined velocity and altitude, releasing the aircraft and said vehicle from each other, and flying the aircraft and said vehicle independently of each other and said vehicle into orbit.

24. A method of launching a transatmospheric vehicle, comprising:

providing an aircraft of the type having an air breathing engine;

providing the aircraft with a rocket engine, and providing the transatmospheric vehicle with a scramjet engine;

releasably connecting the aircraft and the transatmospheric vehicle together;

operating said air breathing engine to accomplish a horizontal takeoff of the connected aircraft and vehicle;

flying the connected aircraft and vehicle, including igniting said rocket engine and then accelerating to a Mach number of about 3.3 and climbing to an altitude sufficient to allow said vehicle to attain orbit and accomplish a predetermined mission;

while so accelerating and climbing, igniting said scramjet engine; and

upon reaching said Mach number and altitude, releasing the aircraft and said vehicle from each other and flying the aircraft and said vehicle independently of each other; including operating said scramjet engine to cause the separated transatmospheric vehicle to continue to accelerate to a velocity exceeding orbital velocity and climb to about the maximum altitude at which the scramjet engine can function, and then allowing said vehicle to coast to orbital altitude.

25. A method as described in claim **24**, in which the step of flying the connected aircraft and vehicle includes, before igniting said rocket engine, operating said air breathing engine and turning the aircraft as necessary to orient said vehicle into a desired orbit inclination and to offset said vehicle to a desired azimuth.

26. A method of launching a transatmospheric vehicle, comprising:

providing an aircraft of the type having an air breathing engine;

providing the aircraft with a rocket engine, and providing the transatmospheric vehicle with a scramjet engine;

releasably connecting the aircraft and the transatmospheric vehicle together;

operating said air breathing engine to accomplish a horizontal takeoff of the connected aircraft and vehicle;

flying the connected aircraft and vehicle, including igniting said rocket engine and then accelerating to a Mach number of about 3.3 and climbing to an altitude sufficient to allow said vehicle to attain orbit and accomplish a predetermined mission;

while so accelerating and climbing, igniting said scramjet engine; and

upon reaching said Mach number and altitude, releasing the aircraft and said vehicle from each other and flying the aircraft and said vehicle independently of each other;

wherein the step of releasing the aircraft and said vehicle from each other includes reducing the thrust of the aircraft rocket engine while maintaining the thrust of the transatmospheric vehicle scramjet engine to create a thrust differential between the aircraft rocket engine and the transatmospheric vehicle scramjet engine, and allowing the thrust differential to cause the aircraft and said vehicle to pivot away from each other.

27. A method as described in claim **26**, further comprising cross-feeding fuel from the aircraft to said vehicle to ensure that said vehicle carries a maximum amount of fuel when the aircraft and said vehicle separate.

28. A method of launching a transatmospheric vehicle of the type having an engine, said method comprising:

providing an aircraft;

providing the aircraft with an engine and a plurality of struts, each such strut having a first end pivotably connected to the aircraft;

pivotably connecting a second end of each strut to said vehicle, and releasably securing said vehicle against pivotal movement relative to the aircraft;

flying the aircraft and secured vehicle to a predetermined Mach number and altitude, including igniting said engines of the aircraft and said vehicle to provide thrust;

reducing the thrust of said aircraft engine while maintaining the thrust of said vehicle engine, to provide a thrust differential;

allowing said thrust differential to cause the aircraft and said vehicle to pivot away from each other; and

then releasing one end of each strut to allow the aircraft and said vehicle to separate from each other and fly independently.

29. A method as described in claim **28**, in which said predetermined Mach number and altitude equals a Mach number of about 2.5 to about 3.5 and an altitude sufficient to allow said vehicle to attain orbit and accomplish a predetermined mission.

30. A method as described in claim **28**, further comprising cross-feeding fuel from the aircraft to said vehicle to ensure that said vehicle carries a maximum amount of fuel when the aircraft and said vehicle separate.

31. A method as described in claim **29**, further comprising cross-feeding fuel from the aircraft to said vehicle to ensure that said vehicle carries a maximum amount of fuel when the aircraft and said vehicle separate.

32. A method as described in claim **28**, which further comprises providing said second end of each strut with a generally longitudinal slot, and mounting a plurality of pins on said vehicle and positioning each of said pins to be received into one of the slots to connect said vehicle to the respective strut; and in which the step of releasing one end of each strut comprises allowing said pins to automatically slide out of said slots.

33. A method as described in claim **28**, in which the aircraft provided has an air breathing engine; and in which the step of flying the aircraft and secured vehicle further includes, before igniting said engines, operating said air breathing engine and turning the aircraft as necessary to orient said vehicle into a desired orbit inclination and to offset said vehicle to a desired azimuth.

34. A method as described in claim **29**, in which the aircraft provided has an air breathing engine; and in which the step of flying the aircraft and secured vehicle further includes, before igniting said engines, operating said air breathing engine and turning the aircraft as necessary to orient said vehicle into a desired orbit inclination and to offset said vehicle to a desired azimuth.

35. A method as described in claim **28**, in which said engine of the aircraft is a rocket engine, and said engine of said vehicle is a rocket engine.

LOCKHEED DELTA ROTOR WING TR3D PATENT+CITED | @HighEarthOrbit_ 28/51

36. A method as described in claim 28, in which said engine of the aircraft is a rocket engine, and said engine of said vehicle is a scramjet engine.

37. A method as described in claim 36, in which the step of flying the aircraft and secured vehicle includes igniting said rocket engine and then accelerating to said Mach number and climbing to said altitude, and, while so accelerating and climbing, igniting said scamjet engine.

* * * * *

United States Patent [19]

Henderson

[11] **Patent Number: 4,662,588**

[45] **Date of Patent: * May 5, 1987**

[54] **AIRPLANE CONFIGURED WITH A MOVEABLE DISK STRUCTURE**

[76] Inventor: **Charles Henderson,** 8308 Cagle Rd., Oxon Hill, Md. 20744

[*] Notice: The portion of the term of this patent subsequent to Feb. 5, 2002 has been disclaimed.

[21] Appl. No.: **584,310**

[22] Filed: **Mar. 5, 1984**

Related U.S. Application Data

[63] Continuation-in-part of Ser. No. 368,862, Apr. 15, 1982, abandoned.

[51] **Int. Cl.**[4] **B64C 1/36**

[52] **U.S. Cl.** **244/118.2;** 244/36; 343/708

[58] **Field of Search** ..... 244/36, 49, 13, 118.1, 244/118.2, 12.4, 12.5, 12.2, 23 C; 343/705, 708; D12/333, 334, 338, 341, 342

[56] **References Cited**

U.S. PATENT DOCUMENTS

D. 167,258	7/1952	Doi	D12/333
D. 183,349	8/1958	Johnson	244/12.2
2,736,514	2/1956	Ross	244/23 C
3,002,709	10/1961	Cochran	244/12.2
3,049,320	8/1962	Fletcher	244/12.4
3,066,890	12/1962	Price	244/12.2
3,656,164	4/1972	Rempt	343/705

Primary Examiner—Trygve M. Blix
Assistant Examiner—Rodney Corl

[57] **ABSTRACT**

A delta-wing and a tapered-wing planform are combined and result in an airplane which does not require a tail assembly or a fuselage and which provides a means to resolve the conflicting requirements for large circular aperture payload space and low drag, high endurance flight. The invention consists of a flying machine with a moveable disk structure which enables a suitable circular aperture phased array antenna system to be operated either within the wing envelope or in a vertical position so that multiple narrow pencil beams can be electronically steered in opposite directions from the airplane. The location of the antenna with respect to the wing structure is such that it can operate with a corporate-fed array in the horizontal position and/or a space-fed array in the vertical position.

6 Claims, 10 Drawing Figures

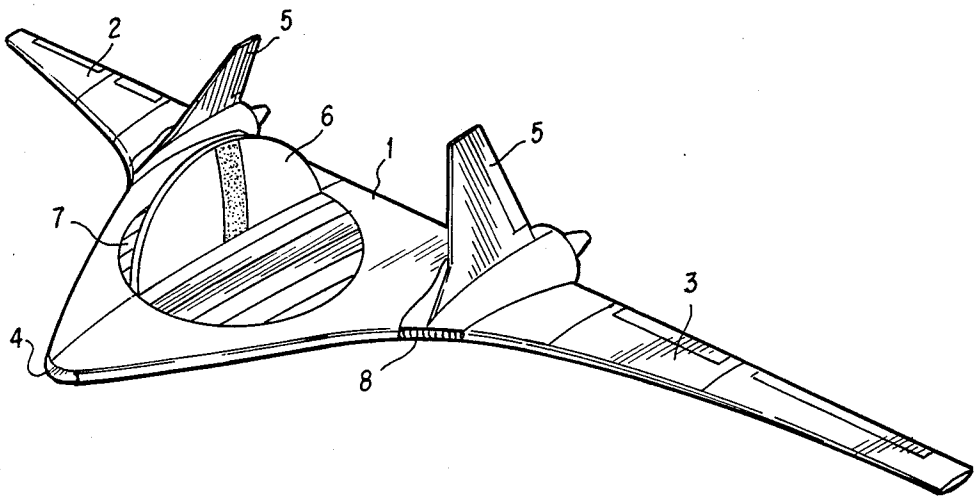

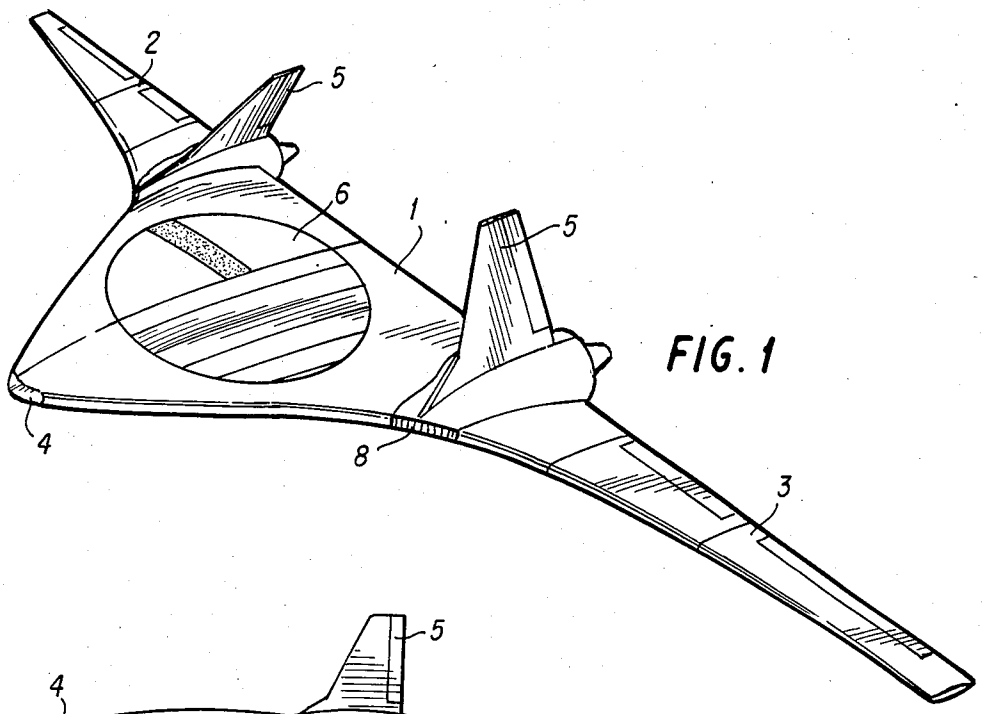

FIG. 1

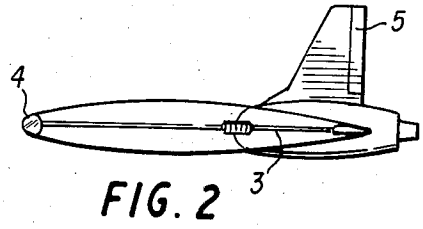

FIG. 2

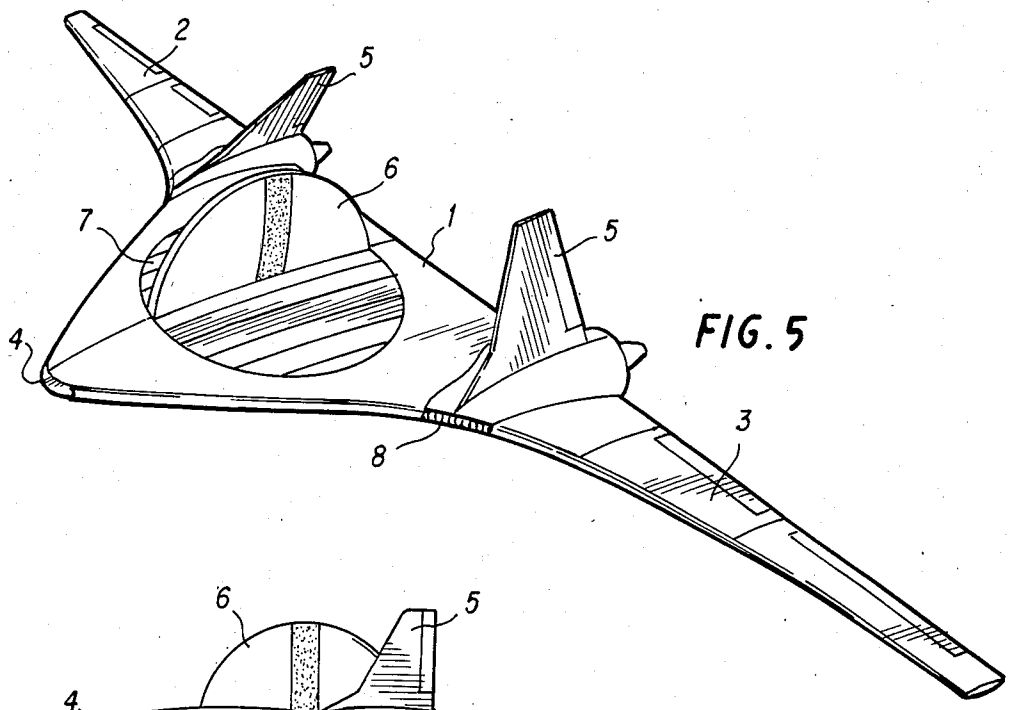

FIG. 5

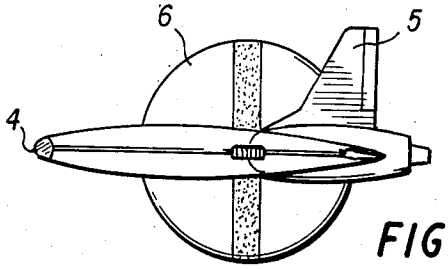

FIG. 6

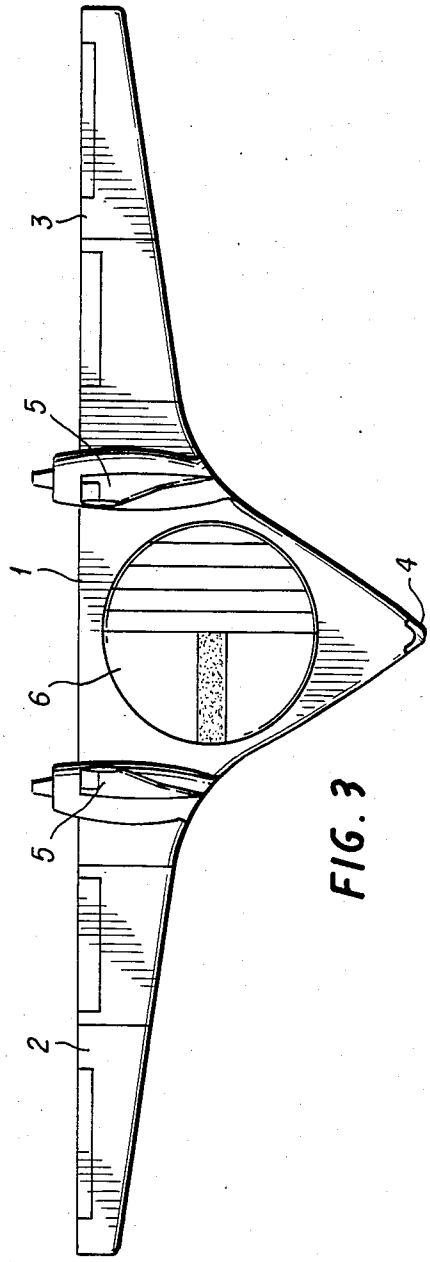

FIG. 3

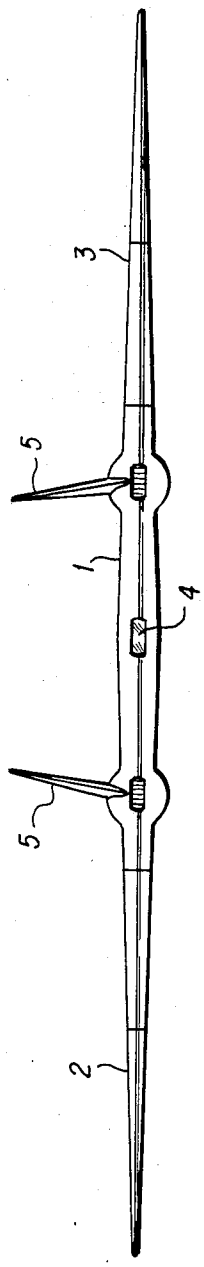

FIG. 4

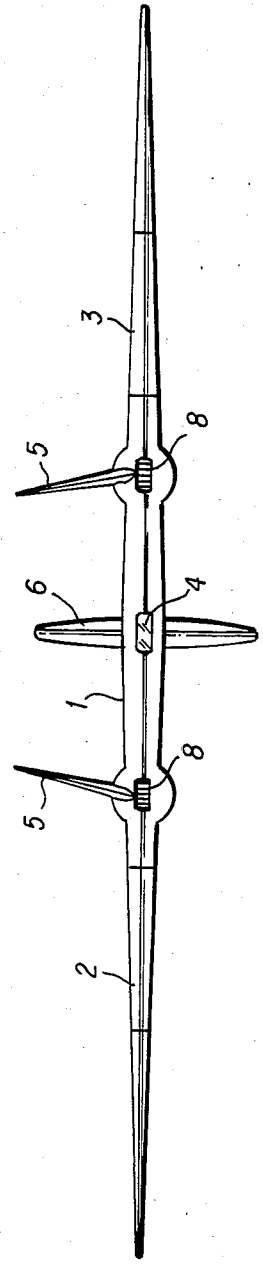

FIG. 7

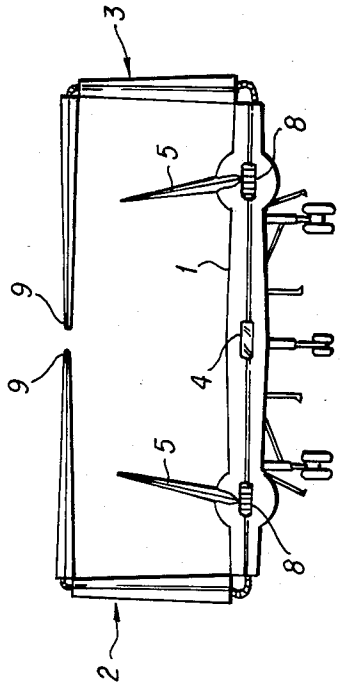

FIG. 8

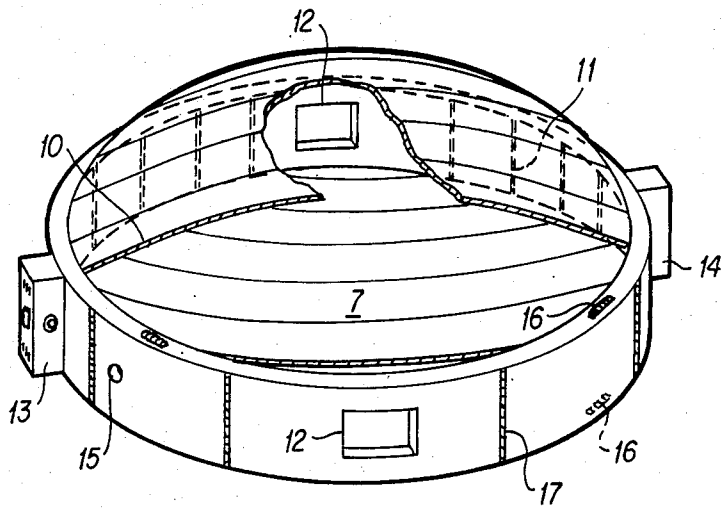

FIG. 9

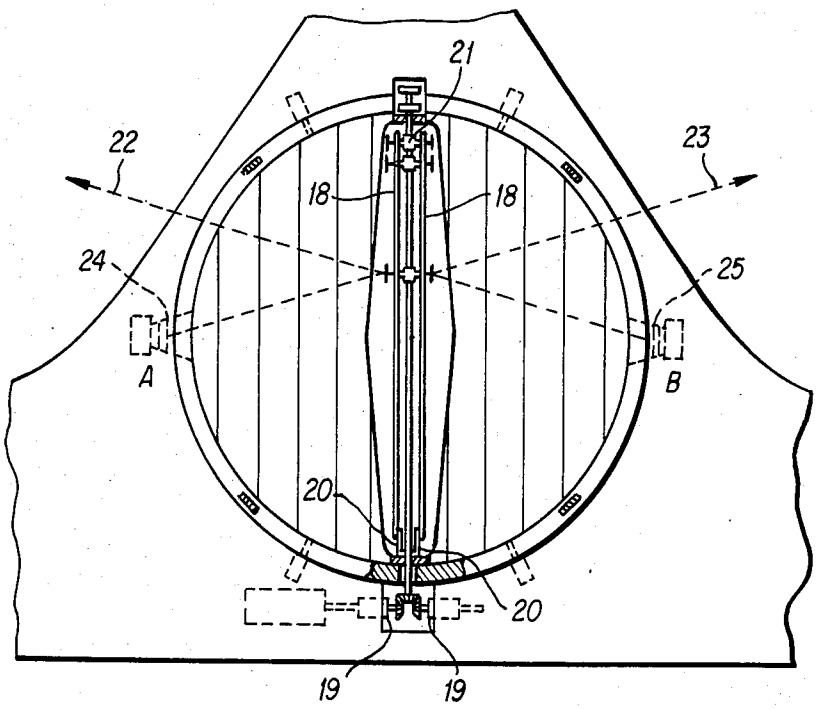

FIG. 10

AIRPLANE CONFIGURED WITH A MOVEABLE DISK STRUCTURE

BACKGROUND OF THE INVENTION

This application is a continuation-in-part of application Ser. No. 368,862, filed Apr. 15, 1982, now abandoned.

The invention relates generally to high endurance airplanes used for communications, surveillance, command and control platforms. Specifically, the invention relates to a low drag airplane with a deployable circular aperture antenna.

SUMMARY

The aerodynamic efficiency of the flying wing is well known. Drag is reduced by eliminating the fuselage and tail and placing the crew, powerplant and payload in the wing envelope. The thickness of the wing can be reduced further by eliminating the crew and operating the airplane as an unmanned remotely piloted vehicle. In a very early design of a three-element wing by Jean F. G. M. L. Charpentier, which was described in U.S. Pat. No. 1,893,129, the outer elements provided most of the lift while the central element was configured to provide longitudinal static stability. The leading edges of the three elements were aligned so as to provide a continuous outline in a horizontal projection.

My invention takes greater advantage of the airplane shape by combining a delta-wing planform in the central section with a tapered-wing planform for the outer sections. The long, relatively narrow outer wing sections provide the airplane with a high endurance capability, while the central section provides space for a large disk structure. Stability of the airplane can be achieved by means other than the shape of the central section. Such means are well known.

The disk structure described in the present invention is primarily intended to house a flat, circular payload. The most likely payload would be a circular aperture antenna used for radar and communications purposes. Such an antenna provides multiple, narrow pencil beams which are centered on opposite sides of the circular aperture. With the antenna in the stowed position within the wing envelope, the direction of the radiated signal would be above and below the airplane. The beams are electronically steered; the antenna is stationary. By rotating the disk structure to a vertical position while in flight, the radiating energy from the antenna is then directed to the left and to the right of the flight path. Only the edge of the disk would be presented to the wind stream when ever it was rotated outside of the wing envelope.

The disk structure is not limited to house only microwave antennas. Instead, it could be comprised of an optical reflector or any other device designed to transmit, receive or reflect energy radiating from a circular aperture. Other classes of payloads are also applicable.

The novel aspects of the invention are its configuration and utility that results from an airplane which is comprised of a combined delta- and tapered-wing planform which provides high endurance and facilitates the use of a large disk structure that can either remain within the wing envelope or be raised during flight so that a circular aperture is presented to either side of the airplane while a narrow edge is presented to the wind stream. The invention permits a manned aircraft or an unmanned, remotely piloted vehicle, so configured, to orbit on station for long periods of time and to direct narrow pencil beams above and below or to either side of the airplane. The two-sided circular aperture, when comprised of a suitable antenna and processing equipment, permits airborne point-to-point communication relay operations, radar operations, command and control signal transmission and reception and combined operations to be carried out with highly directional beams.

BRIEF DESCRIPTION OF THE DRAWINGS

FIG. **1** is a three-quarter perspective view from above of an airplane in flight, showing the antenna stowed.

FIG. **2** is a side elevation view of the airplane shown in FIG. **1**.

FIG. **3** is a top plan view of the airplane with the antenna stowed.

FIG. **4** is a front elevation view of the airplane with the antenna stowed.

FIG. **5** is a three-quarter perspective view from above of an airplane in flight, showing the antenna tilted vertically.

FIG. **6** is a side elevation view of the airplane with the antenna tilted vertically.

FIG. **7** is a front elevation view of the airplane with the antenna tilted vertically.

FIG. **8** is a front elevation view of the airplane on the ground with the wings folded and the antenna stowed.

FIG. **9** is a perspective view from above of the removeable disk housing configured for a circular aperture antenna with the antenna and radome removed for clarity.

FIG. **10** is a top plan view of the central wing section, including a cross sectional view through the antenna housing along the mounting shaft.

BRIEF DESCRIPTION OF THE PREFERRED EMBODIMENT

Most of the existing airplanes used for communications, surveillance, command and control require large airframe structures comprised of fuselage and tail assemblies. Such structures do not permit the use of a circular aperture antenna larger than the diameter of the fuselage. Furthermore, the size of the fuselage cannot be increased without increasing drag and increasing the radar cross section of the airplane. A pure flying wing airplane would eliminate the fuselage and offer greater aerodynamic efficiency. However, the wing area would have to be enlarged considerably to house a circular aperture antenna.

It is well known that flight endurance is a function of aspect ratio (i.e., the ratio between the square of the span, b, and the surface area S A.R. $=b^2/S$). Hence, the span of a pure flying wing would have to be exceedingly large to counteract the larger area required by the circular aperture.

According to my invention shown in FIG. **1**, the disadvantages of the other airplane structures are overcome by using a combined delta-wing planform and a tapered-wing planform. The delta-shaped center section **1** contains the navigation equipment, tricycle landing gear, communications and radar equipment, hydraulics, fuel control system, and the moveable disk structure which houses the circular aperture antenna. In the tapered outer wing sections **2,3** are the fuel cells, flaps and elevons. The twin rudder assemblies are mounted over

LOCKHEED DELTA ROTOR WING TR3D PATENT+CITED | @HighEarthOrbit_ 35/51

the powerplants which are imbedded in the wing at the transition between the central and outer sections. The rudder assemblies are canted inward to reduce radar cross section back-scatter from the side aspect. FIG. 2 shows the otherwise low profile of the unmanned airplane when viewed from that aspect. The optical window 4 contains a television camera as a landing aid.

FIG. 3 shows the rudder assemblies mounted somewhat to the rear of the antenna aperture in order to reduce blockage by the metal portions of the assembly 5. The moveable disk 6 is shown in the horizontal or stowed position. A stationary wind curtain 7 covers one-half of the disk on opposite sides of the top and bottom. The thin curtain is constructed of flexible material transparent to antenna's microwave frequency band.

The circular aperture antenna contained within the disk is covered by a radome whose shape conforms with the shape of the central section when the antenna is in the horizontal position. FIG. 4 shows the low profile in the forward aspect and illustrates how the stowed antenna is completely contained within the wing envelope. The antenna has no blockage whatsoever for beam directions below the airplane.

When the antenna is operated in the horizontal position, a suitable corporate-fed phased array would be required. By placing separate antenna elements on both sides of the antenna, narrow pencil beams can be steered in directions above and below the airplane either simultaneously or on a time-shared basis. This permits vehicle communication links between the airplane and satellites above and ground terminals below. It also permits radar targets within the field of view to be tracked above and below the airplane.

FIG. 5 shows the moveable disk 6 rotated into the vertical position. This allows pencil beams to be directed to either side of the airplane. As the disk is rotated into position, a curtain 7 is raised on each side to cover the openings left by the disk. The curtains can either be raised mechanically or they can be made of a stretchable material that will spring up after being pressed flat by the disk in the stowed position. In the raised position the edge of the curtain next to the disk will deform to its shape and positive air pressure between the top and bottom curtain will maintain their curvature to conform to the outline of the wing surface.

FIG. 5 also shows how the antenna in the vertical position can be operated as a space-fed antenna with the separate feeds A,B located at the focii for a back-to-back parabola configuration. In this case the separate feed points are located in front of each respective antenna. On the other hand, if the disk is configured with back-to-back lens antennas, then the feed points A,B will be located behind their respective antennas. The versatility of these arrangements are entirely novel. The location of the feed with respect to the antenna yeilds a focal length, f, to diameter, D, ratio of $f/D=\frac{1}{2}$.

FIG. 6 shows the side elevation view of the airplane with the disk rotated to the vertical position. A slight blockage will be caused by the wing and the rudder assembly. However, by constructing the rudder assembly out of composite material such as fiber glass and foam which is relatively transparent to microwave frequencies and by using only a single spar for structural strength, then the blockage can be minimized.

The antenna comprised of a phased array and a suitable feed configuration can remain stationary while the beams are steered electrically. The state-of-the-art is such that active antenna elements comprised of microcircuits can be used on the array, thus permitting highly steerable multiple beams with an antenna that is relatively light in weight and very reliable. The latter characteristic results from the gradual degradation in performance which is tolerable when a few elements fail as opposed to the catastrophic failure of a single high power transmitter. Again, this technology is not new. However, it serves to illustrate how such a suitable antenna can be incorporated in the moveable disk without undue weight or power penalties.

In FIG. 7 a front elevation view of the airplane is shown with the disk 6 rotated into the vertical position. Rotation can be accomplished by hydraulic means with the rotation rate being similar to the rate for extending the landing gear. Any asymmetric aerodynamic effects encountered during the rotation can be compensated for by means of the wing control systems. The drag produced by the disk will be less than that produced by a lowered landing gear because of the streamline shape of the disk. Only the edge of the disk will be presented to the wind stream. The disk is returned to the horizontal position before the landing gear is lowered.

FIG. 7 also shows that the powerplant inlets 8 are contained in the leading edge of the wing. In this position they present a relatively low radar cross section in the forward aspect. The airplane is primarily intended to orbit at high altitudes at low subsonic speeds in order to conserve fuel and to extend its range and endurance. However, it should be understood that the inlets can be modified if after wind tunnel tests such modifications are deemed to be appropriate.

In FIG. 8 the airplane is shown on the ground with the wings folded. The wings can be constructed of a composite material that has a lighter weight but a greater stiffness than aluminum. Wing folding can be accomplished by using cantilever wing sections and spring loading the joints. Then, bidirectional winch control can be used to fold and unfold the wings in synchronism. By placing large bumpers 9 on the wing tips and keeping the bumpers in compression, the outer wing sections will remain in the position shown when the fuel cells are empty. Alternatively, a hard point on top of a reenforced rudder assembly would allow the outer wing section to rest on that assembly. With the wings folded in two places, the airplane would occupy a volume that is approximately one-half that of a high performance fighter plane.

The airplane described herein can be readily maintained on the ground by removing the radome and the wind curtains and replacing any failed antenna elements or other electronic equipment. In addition, the entire disk can be removed and replaced with a different payload. That is, the disk does not have to be limited to an antenna configuration, nor does it have to be rotated vertically. It can be configured for aerial mapping equipment, electronic countermeasures equipment, air-dropped buoys and small downward ejected weapons. A disk comprised of a vertical-thrust powerplant instead of a payload would allow vertical takeoff and landing (VTOL) operations. There are obviously many other variations that can be configured with the replaceable disk structure. No attempt is made here to list them all.

An aircraft designed with the removeable disk housing structure configured for a rotatable antenna is the preferred embodiment of this invention. The circular, disk-shaped antenna housing is symmetric, hence the

delta-wing airfoil must also by symmetric so that the antenna housing can be completely contained within the wing envelope. By imbedding the aircraft powerplants in the wing at the transition points between the delta-wing and tapered-wing sections as shown in FIG. **3**, it is possible for the tapered-wing to have a different airfoil such as a cambered one. The location of the powerplants as well as their associated vertical stabilizers also serves as a means for separating the disturbed airflow, which results when the antenna housing is rotated, from the airflow which produces lift on the tapered-wings.

FIG. **9** shows the removeable disk structure configured for a rotatable antenna with the antenna and housing removed for purposes of clarity. The curtains which cover the opening when the antenna is rotated to the vertical position are made of a suitable material such as fiberglass which is transparent to microwave radiation. The fixed curtains, **10**, are in diagonally opposite positions and the moveable curtains, **7**, are opposite each fixed one. The curtains are moved by spring-action, **11**, once the antenna housing begins to rotate. Several curtain panels close to the center of the structure are made with elastic content so that they can slide together and deform to the shape of the antenna housing in its vertically rotated position. The window openings in the side of the disk structure, **12**, permit the antenna, so rotated, to be space-fed from two feed points which are lateral to and equidistant from the centerline of the aircraft.

The two rectangular-shaped appendages on either end of the disk structure shown in FIG. **9** are used to align the disk when it is installed in the cavity in the delta-wing section. The larger of the two, **13**, houses suitable umbilical connectors, right-angle drive gears and shaft bearings, while the other, **14**, houses shaft bearings. The disk is held in the aircraft by means of suitable retractable locking pins and receptacles, **15**. The pins are mounted so that they retract into the wing. When the disk is removed from the aircraft, it is supported at hard points, **16**, on the bottom and then permitted to slide down from the cavity on suitable ball bushing bearings, **17**, to a conventional ground support vehicle used for installing, removing and transporting the disk.

FIG. **10** shows the back-to-back circular aperture phased array antennas, **18**, rotated to the vertical position. Rotation is accomplished by suitable means through a right-angle drive mechanism which is clutch-disengageable at the interface, **19**, between the disk structure and the wing. Suitable means are provided for mounting the circular arrays inside the radome housing, **20**, and attaching the housing to the drive shaft so that the entire system moves as a unit. Following the 90-degree rotation, the antenna system is locked in place by suitable means.

In a preferred embodiment of the invention, a suitable arrangement of back-to-back antenna elements are interconnected through suitable phase shifter modules, **21**, as shown in FIG. **10**. This permits the antenna beams, shown typically by single rays, **22** and **23**, to be alternately produced from suitable feeds A, **24**, and B, **25**, and then independently steered electronically in a space-fed lens configuration. Many other antenna configurations are possible. By electronically disconnecting the link between antennas at the phase shifter modules, each antenna can then be operated as a reflector rather than a lens, thereby permitting simultaneous operation of the two sides in a space-fed parabola configuration. This same configuration can be used with a suitable reflector and phased array at the feed to produce a fixed beam, variable beamwidth antenna system for ground mapping applications.

The above description and appended drawings show by way of example the preferred embodiment of the invention, but it should be understood that any aircraft manned or unmanned to which the above features are applied falls within the scope of the invention which is by no means limited to the types shown and described.

What is claimed and desired to be secured by Letters Patent of the United States is:

1. In an aircraft comprised of a wing whose central wing section encompassing the aircraft's longitudinal centerline is not obstructed by a fuselage, a large replaceable disk structure mounted in a circular cavity which is vertically orientated and extends completely through said wing section; an inner, structure-mounted moveable disk-shaped radome housing which contains a circular aperture antenna system, said housing being rotatable from a position inside the wing envelope to a vertical position outside, with only the radome's edge being presented to the wind stream, thereby permitting said antenna system to direct beams to both sides of the flight path, with a minimum of obstruction in either direction.

2. In an aircraft comprised of a wing whose central wing section encompassing the aircraft's longitudinal centerline is not obstructed by a fuselage, a large replaceable disk structure mounted in a circular cavity which is vertically orientated and extends completely through said wing section; an inner, structure-mounted moveable disk-shaped radome housing which contains a circular aperture antenna system, said housing being rotatable from a position inside the wing envelope to a vertical position outside, with only the radome's edge being presented to the wind stream, thereby permitting said antenna system comprised of suitable back-to-back antennas to be operated in a space-fed reflector configuration, with the feed points transversely located in the wing so that the beams emanating from each antenna are directed, with a minimum of obstruction, to the same side as their respective feed.

3. In an aircraft comprised of a wing whose central wing section encompassing the aircraft's longitudinal centerline is not obstructed by a fuselage, a large replaceable disk structure mounted in a circular cavity which is vertically orientated and extends completely through said wing section; an inner, structure-mounted moveable disk-shaped radome housing which contains a circular aperture antenna system, said housing being rotatable from a position inside the wing envelope to a vertical position outside, with only the radome's edge being presented to the wind stream, thereby permitting said antenna system comprised of suitable back-to-back antennas to be operated in a space-fed lens configuration, with the feed points transversely located in the wing so that the beams emanating form each antenna are alternately directed, with a minimum of obstruction, to the side opposite their respective feed.

4. An aircraft comprising: a delta-wing central section which is unobstructed by a fuselage on the aircraft longitudinal centerline; a pair of tapered outer wing sections, each tapered section extending outwardly from said central section; a pair of powerplants, each laterally disposed and imbedded in the wing at the transition between the steeply sloping leading edge of said delta-wing section and the gradually sloping leading

LOCKHEED DELTA ROTOR WING TR3D PATENT+CITED | @HighEarthOrbit_ 37/51

edge of said tapered wing section; a large circular cavity, vertically orientated and extending completely through said delta-wing section; a moveable inner disk structure which fills said cavity, forms a substantially continuous surface with said delta-wing section and is rotatable about the aircraft longitudinal axis between a horizontal position within the wing envelope and a vertical position outside the envelope; and said disk structure, being rotated vertically, is positioned so that the narrow edge of said disk structure faces the wind stream.

5. In an aircraft of the type comprised of a central wing section without a fuselage on the aircraft longitudinal centerline, a large circular cavity, vertically orientated and extending completely through said wing section; a releasably mounted disk structure which fills said cavity, forms a substantially continuous surface with said wing section and which is removable on the ground such that said disk structure is readily replaced by a different disk structure; and said disk structure, being mounted substantially within the wing envelope, provides a reduced aircraft drag profile and, concurrently, is provided with unobstructed access to the external environment above and below the aircraft.

6. In an aircraft of the type comprised of a central wing section without a fuselage on the aircraft longitudinal centerline, a large circular cavity, vertically orientated and extending completely through said wing section; a disk structure mounted in said cavity so as to form a substantially continuous surface with said wing section; and said disk structure, being comprised of a large circular aperture antenna housing, is positioned horizontally so as to remain within the wing envelope and so that the circular aperture sides of said antenna housing face outwardly, above and below the aircraft.

* * * * *

United States Patent [19]

Grow

[11] **Patent Number: 4,566,657**

[45] **Date of Patent: Jan. 28, 1986**

[54] **SPAN LOADED FLYING WING CONTROL**

[76] Inventor: **Harlow B. Grow**, 16530 Chattanooga Pl., Pacific Palisades, Calif. 90272

[21] Appl. No.: **211,517**

[22] Filed: **Dec. 1, 1980**

Related U.S. Application Data

[63] Continuation of Ser. No. 40,663, May 21, 1979, abandoned.

[51] **Int. Cl.**[4] **B64C 9/20**; B64C 9/32; B64C 9/00

[52] **U.S. Cl.** ..... **244/90 A**; 244/113; 244/87; 244/215; 244/36

[58] **Field of Search** ..... 244/13, 36, 90 A, 110 D, 244/113, 213, 215, 217

[56] **References Cited**

U.S. PATENT DOCUMENTS

2,406,506	8/1946	Northrop	244/13
2,431,449	11/1947	Ashkenas et al.	244/13
2,650,780	9/1953	Northrup et al.	244/36
4,040,580	8/1977	Schwaerzler	244/113

FOREIGN PATENT DOCUMENTS

708447	7/1941	Fed. Rep. of Germany	244/113
744668	11/1943	Fed. Rep. of Germany	244/113
877353	12/1942	France	244/113

Primary Examiner—Trygve M. Blix
Assistant Examiner—Rodney Corl
Attorney, Agent, or Firm—William H. Maxwell

[57] **ABSTRACT**

A flying wing aircraft control for angle of attack and direction thereof, comprising retractile controlling surfaces rearward of the center of lift and along the trailing edges and extensible over the top and bottom cambers of the wing in spaced relation to the trailing portions thereof and with variable angular dispositions with respect to air flow over the cambers so as to establish the desired moment arm with respect to the lift center of the flying wing to control the same into and out of a nose-up attitude with respect to the line of flight and with respect to direction, as required.

14 Claims, 3 Drawing Figures

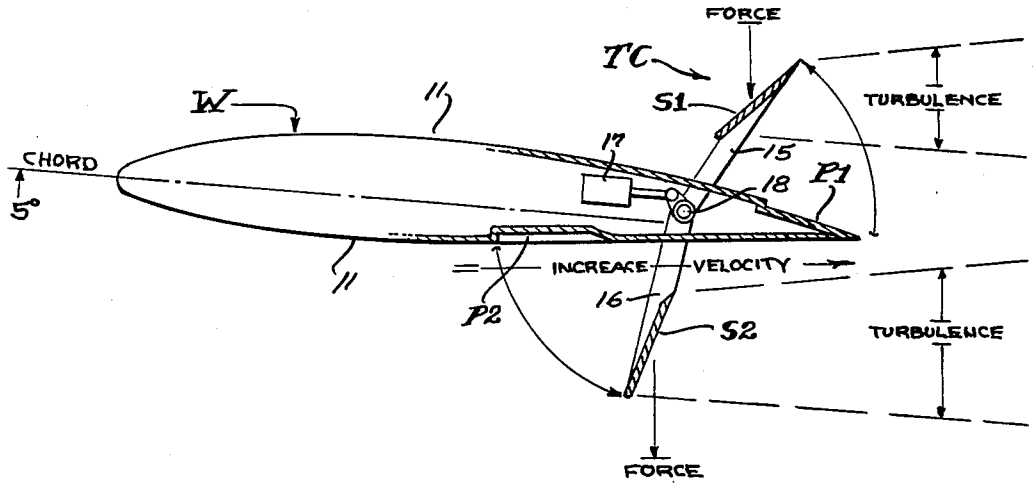

U.S. Patent Jan. 28, 1986 4,566,657

FIG. 1.

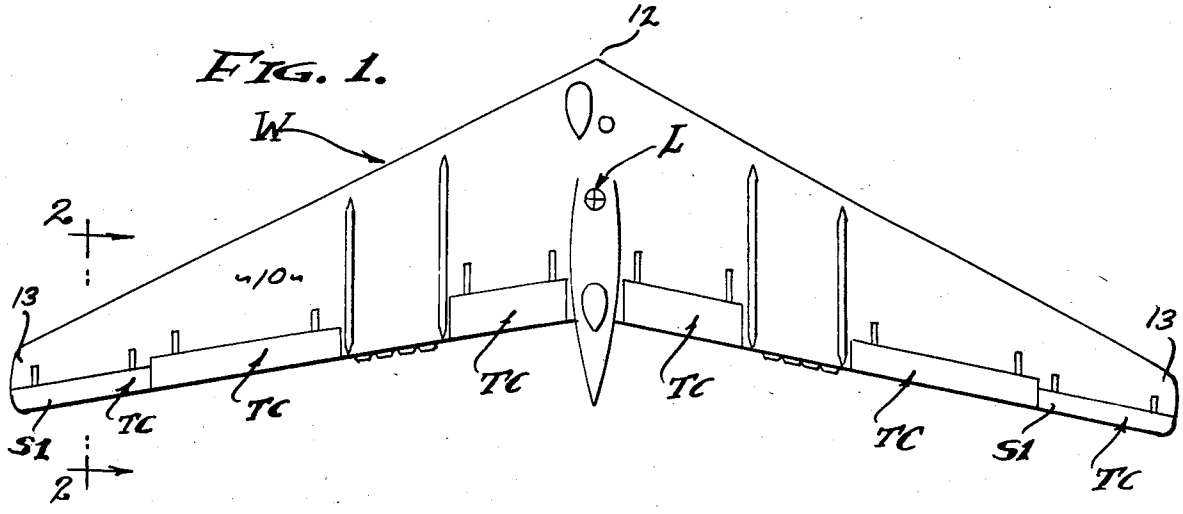

FIG. 2.

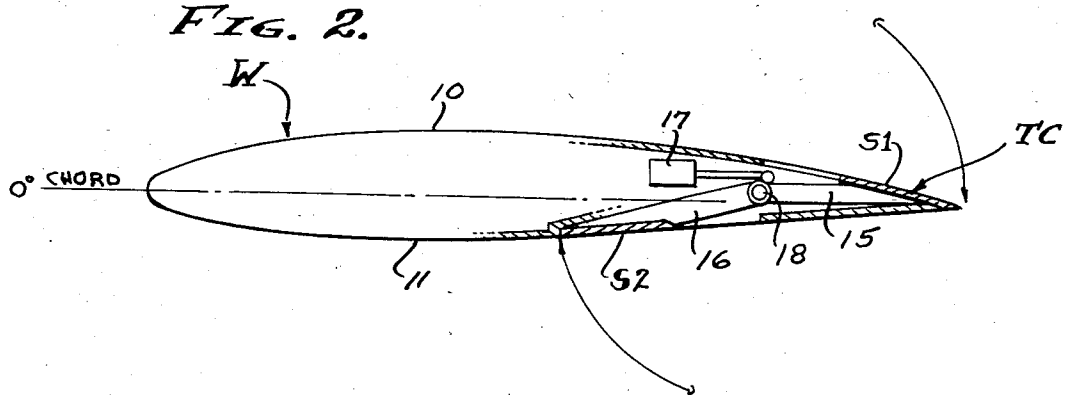

FIG. 3.

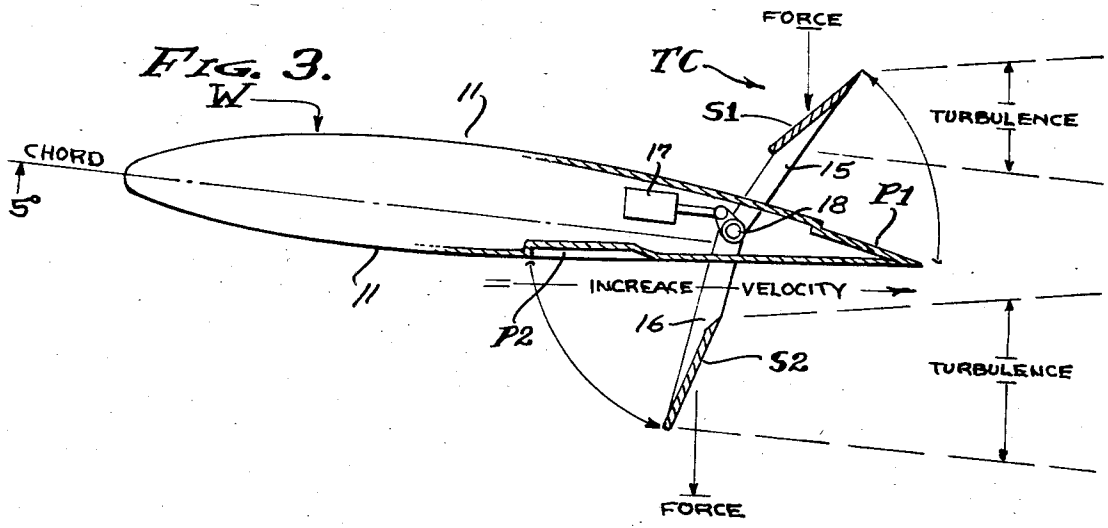

LOCKHEED DELTA ROTOR WING TR3D PATENT+CITED | @HighEarthOrbit_ 40/51

SPAN LOADED FLYING WING CONTROL

This application is a continuation of application Ser. No. 40,663 filed May 21, 1979, now abandoned.

BACKGROUND

The angle of attack is of primary concern in the operation of aircraft wings, during both take-off and landing, and during flight as well. In conventional aircraft having a tail section and empenage control surfaces, the wing is attached at a positive four or five degree angle relative to the fuselage and normal trim plane of the horizontal stabilizer. However, in "flying wing" and "span loader" type aircraft devoid of tail sections and rearwardly extended empenage control surfaces there is an inherent absence of means to establish the most necessary moment of force required to controllably vary the angle of attack. Therefore, the line and force of thrust has been employed to implement increased angle of attack attitudes, but with tragic results as when a nose-down attitude is accompanied with too great an air speed; in which case flying wing aircraft have failed when the pilots were unwaringly and/or unavoidably entrapped in such situations. Accordingly, it is a general object of this invention to provide means by which downward force is applied to flying wing or span loader aircraft to controllably increase the wing angle of attack, to control roll, and to control direction, thereby establishing attitude changes and lift as circumstances require.

Span loaded flying wings have great advantages over conventional fuselage aircraft, having reduced parasite drag for increased speed, range and high performance characteristics. Also, load distribution throughout the wing configuration has its structural advantages. Flight control is executed in a normal fashion and differs from conventional aircraft only in a minor degree, utilizing for example, flaps to produce drag at the wing tip in place of a rudder per se. In practice the rudder flaps have formed a portion of the "trim flaps" and which are loacted at the wing tips and adjusted up or down to trim the aircraft longitudinally to the desired angle of attack attitude. Maneuverability of the flying wing is by means of "elevons" combining the functions of elevator and aileron and located along the trailing edge inboard of the aforesaid trim flap. Additionally, landing flaps are employed inboard of said ailerons and/or elevons. A characteristic of the said trim flap control is its "spoiler" effect which disturbes air flow over the upper camber of the wing and reduces lift. Therefore, greater wing area is required while the trim effect is restricted by the closely coupled moment arm over such trim flaps as related to the center of lift of the wing. Accordingly, it is an ofject of this invention to provide means to remove air flow disturbances from the wing surfaces and to increase the moment arm effectiveness of reactive air control surfaces, in order to control the positive angle of attack and direction of flight, as may be required.

The necessity of controlled angle of wing attack cannot be over emphasized, for optimum take-off characteristics, for in-flight attitude corrections and altitude changes, and for landing characteristics as well. For example, on take-off there are two distinct speed conditions; V1 which is the speed at which flight is committed, taking into account all factors including load, runway length, altitude, wind, temperature and pressure, and obstacles etc.; and V2 which is the speed at which the aircraft is to be rotated into a climbing attitude. It is the transistion between wing attitudes complying with these two speed conditions with which this invention is concerned on take-off, and landing as well. In flight and on landing, this invention is concerned with wing attitude adjustability without resort to changes in thrust, and especially without the requirement of increasing thrust. For example, angle of wing attack is not to be increased in reliance upon an increase in thrust; and on the contrary is increased independent of thrust applied. Accordingly, it is another object of this invention to provide control surfaces independent of the thrust applied and which determines the positive angle of wing attack, whereby transistion from a V1 condition into a V2 condition can be effected to rotate the aircraft on take-off, and to advantageously apply a nose-up attitude in flight and at lower speeds for landing.

In carrying out this invention there are retractile control surfaces that extend into clear air separated from the supporting wing camber (top and bottom). In practice, extension of said control surfaces increases their angle of deflection to establish controllable downward thrust at the trailing edges of the wing (left and right). The lever effect with respect to the center of lift is enhanced by the swept wing configuration, applying a downward force that rotates the wing to increase the angle of attack. Simultaneously there is turbulant airflow around said control surfaces, creating the desirable drag for controlling air speed and directional stability. It is therefore an object of this invention to provide a simple and rugged structural form of means inherently balanced and requiring minimum force application for its operation.

SUMMARY OF INVENTION

This invention relates to flying wing or span loaded wing aircraft, wherin directional stability and angle of attack is by means of trimming the aircraft at the trailing edges of the wing. In practicing this invention there are upper and lower retractile control surfaces along each trailing edge, extending inboard from the wing tip. In the case of both upper and lower controllable surfaces, angularity to the line of flight increases with extension thereof to create an increasing downward controlling force and to create a commensurately increasing drag. A feature is that the two controlling surfaces move into remote positions with respect to the upper and lower cambers of the wing and thereby have little or no adverse effect upon the boundry layer of air passing over and under the wing. However, advantage is gained with respect to the lower control surface which, being upwardly turned with respect to the air stream, establishes a convergent slot that increases air velocity so as to lower the pressure against the bottom camber of the wing at the trailing edge portion thereof, thereby negating or greatly reducing the upward thrust effect thereagainst. Extension and retraction of these control surfaces is by conventional pilot controls (not shown) through servo means or the like as indicated.

The foregoing and other various objects and features of this invention will be apparent and fully understood from the following detailed description of the typical preferreed form and application thereof, throughout which description reference is made to the accompanying drawings.

LOCKHEED DELTA ROTOR WING TR3D PATENT+CITED | @HighEarthOrbit_ 41/51

DESCRIPTION OF THE DRAWINGS

FIG. 1 is a plan view of a powered flying wing aircraft incorporating the control therefor disclosed herein.

FIG. 2 is a longitudinal sectional view through a typical control portion of the wing taken as indicated by line 2—2 on FIG. 1, showing the control surfaces retracted and the wing at a zero degree of attack.

FIG. 3 is a view similar to FIG. 2 showing the control surfaces extended and the wing at an increased angle of attack.

PREFERRED EMBODIMENT

The aircraft under consideration is of the flying wing or span loader type, and which may be powered according to my U.S. Pat. No. 4,026,500 entitled AIRCRAFT WING WITH INTERNAL FLOW CONTROL PROPULSION, issued May 31, 1977. The flight controls for such aircraft are quite conventional insofar as pilot operation is concerned. However, certain differences are involved in the directional stability control surfaces as related to the conventional rudder, elevator, ailerons, flaps and trim tabs. Any one or all of the conventional control surfaces are replaced by the trim control TC of the present invention, in each instance operating on the application of downward force and resultant drag. Quite different however is the rudder function in conventional flying wings which employ independently operable flaps at the opposite wing tips. It is said conventional control surfaces which are supplemented or replaced by the attitude and directional control means of the present invention. Accordingly, the trim control TC is disclosed herein as a separate control means that replaces any one or all of the conventional control surfaces used in the normal process of flying an aircraft, powered aircraft or gliders.

The flying wing W is a combination of elements and components comprised of the basic wing structure having upper and lower cambers **10** and **11**, swept back from a nose **12** to opposite wing tips **13**. The center of lift L is located substantially as shown, and which of course varies dependent upon wing design and the angle of attack. The aircraft also includes all necessary features for its useful operation, including thrust means, landing gear, directional controls, and a pilot compartment and/or cabin for passengers and cargo.

The trim control TC is provided for adjusting the directional attitude of the flying wing, including the desired angle of attack. With flying wings, devoid of a fuselage and any angle of incidence between a fuselage centerline and root chord line of a wing, the ground angle and angle of attack are the same and coincidental with the root chord line of the wing. Therefore, the angle of attack of the flying wing is to be related to the ground horizontal and as well to the flight plane in lieu of the aforesaid angle of incidence. It is this relationship to the flight plane which establishes the ever so important nose-up attitude which is created with the trim control TC which involves retractile upper and lower control surfaces S1 and S2 extensible above and below the wing camber **10** and **11** over the trailing portion of the wing. A feature of the control surfaces S1 and S2 is their angularity to the flight plane, and disposed to react downwardly in the clear air stream above and below the wing; replacing any one or all of the conventional control surfaces including rudders, elevators, ailerons, flaps and trim tabs.

The wing structure is recessed and/or provided with pockets P1 and P2 to receive the control surfaces S1 and S2, there being a pocket P1 along each trailing edge and in the upper camber **10** to receive the control surface S1 flush with the camber **10**, and there being a pocket P2 forward of each trailing edge and in the lower camber **11** to receive the control surface S2 flush with the camber **11**. In practice, the plan configuration of the control surfaces and pockets therefore is substantially rectangular in each instance.

As is clearly shown in the drawings, the control surfaces S1 and S2 are planar members that become fair continuations of the cambered wing surfaces when retracted flush therewith. However, as they are extended their angularity with respect to the chord line and to the line of flight or flight plane is increased. In practice, the control surfaces are secured to integral lever arms **15** and **16** pivoted from a common fulcrum **18**, essentially a first class lever whereby the control surfaces S1 and S2 are balanced in positions above and below the wing W. Accordingly, the control surfaces are like planar members fixed to the arms **15** and **16** to move therewith from retracted positions to angularly inclined positions, angularity increasing with the extention thereof. A servo **17** is shown to move the lever and control arm system to selected positions between the retracted and maximum extended positions shown. Rudder functioning is by means of differential positioning by the servos **17** at opposite wings, the control surfaces being oppositely extended and/or retracted one relative to the other. Elevator and angle of attack functioning is by means of unison positioning by the servos **17** at opposite wings, the control surfaces being simultaneously extended or retracted. Aileron functioning is by means of differential positioning by the servos **17** along opposite wing trailing edges, the control surfaces being oppositely extended and/or retracted one relative to the other. Flap functioning is by means of unison positioning by the servos **17** at opposite wings, the inboard control surfaces being simultaneously extended or retracted. And, trim functioning is by means of descrete application of unison and/or differential positioning adjustment by the servos **17** as may be required.

It will be observed that the center of lift L of wing W is substantially forward of the wing trailing portions where the trim control TC is effective in providing downward force reactively from the angular disposition of the control surfaces from the flight plane or line of flight. Accordingly, the control surfaces S1 and S2 are placed in optimum positions with respect to the center of lift L in order to maximize the moment arm effectiveness to rotate the wing into the angle of attack desired, as related to the ground horizontal or flight plane as the case may be.

From the foregoing it will be apparent that the trim control TC structure is simple and sound. Force applied against either control surface S1 or S2 is equalized by the other, while downward force is increasingly exerted thereby as the arms **15** and **16** are extended. The said control surfaces are carried by one or more arms as circumstances require, on common axes as shown. In practice, the span of each control surface remains parallel with the cambered surface of the wing at the trailing portion thereof. And when extended, the control surfaces S1 and S2 produce drag for directional stability, acting as the rudder, elevator, aileron, flap or trim tab that directs the flying wing W. And as stated at the outset, the drag effect is remote from the wing camber

so as to operate away from the lifting air flow over the wing, and with a velocity increase within the lower slot formed thereby decreasing the lift at the underside of the trailing edge portion of the wing. Accordingly, angle of attack to the line of flight is controllably increased or decreased while directional control is applied, all as circumstances require.

Having described only a typical preferred form and application of my invention, I do not wish to be limited or restricted to the specific details herein set forth, but wish to reserve to myself any modifications or variations that may appear to those skilled in the art as set forth within the limits of the following claims:

I claim:

1. A flying wing aircraft control for inducing angle of attack and controlling the line of flight, and including;

a wing having upper and lower cambered surfaces and a center of lift substantially forward of a trailing edge establishing a moment arm therebetween,

upper and lower trailing edge pitch control surfaces aft of the center of lift and retractile substantially coincidental with the upper and lower cambered surfaces of the wing,

lever means to space said upper and lower pitch control surfaces into the air stream above and below said upper and lower cambered surfaces of the wing and inclined upwardly with respect to the air stream continuing to flow over and under the wing for reaction downwardly at the trailing edge of the wing,

and means positioning the lever means to extend and retract said pitch control surfaces for adjusting the downward force reaction on said moment arm and resultant pitch control of the flying wing aircraft.

2. The flying wing aircraft control as set forth in claim **1**, wherein the wing is of swept-back configuration placing the center of lift substantially forward of the trailing edge portion of the wing tips for maximizing the rotative moment arm applied by downward force of the said control surfaces.

3. The flying wing aircraft control as set forth in claim **1**, wherein the upper and lower control surfaces are retractile into pockets in the upper and lower cambered trailing surfaces of the wing to be flush therewith when fully retracted.

4. The flying wing aircraft control as set forth in claim **1**, wherein the upper and lower control surfaces are flat planar members disposed spanwise in parallel relation to the upper and lower cambered surfaces of the trailing edge portion of the wing.

5. The flying wing aircraft control as set forth in claim **1**, wherein the lever means is a first class lever disposed on a spanwise axis aft of the center of lift and extending rearwardly to swing the upper control surface into the air stream above the upper cambered surface of the trailing edge portion, to apply downward force at the trailing edge portion of the wing.

6. The flying wing aircraft control as set forth in claim **1**, wherein the lever means is a first class lever disposed on a spanwise axis aft of the center of lift and extending forwardly to swing the lower control surface into the air stream below the lower cambered surface of the trailing edge portion, to apply downward force at the trailing edge portion of the wing.

7. The flying wing aircraft control as set forth in claim **1**, wherein the lever means is a first class lever disposed on a spanwise axis aft of the center of lift and with integral arms extending rearwardly and forwardly respectively to swing the upper and lower control surfaces into the air stream above and below the upper and lower cambered surfaces of the trailing edge portion, to apply balanced downward force above and below the trailing edge portion of the wing.

8. The flying wing aircraft control as set forth in claim **1**, wherin the lever means is a first class lever disposed on a spanwise axis aft of the center of lift and extending rearwardly and fixed to the upper control surface to swing upward and forwardly with increasing angular inclination into the air stream above the upper cambered surface of the trailing edge portion, to apply downward force at the trailing edge portion of the wing.

9. The flying wing aircraft control as set forth in claim **1**, wherein the lever means is a first class lever disposed on a spanwise axis aft of the center of lift and extending forwardly and fixed to the lower control surface to swing downward and rearwardly with increasing angular inclination into the air stream below the lower cambered surface of the trailing edge portion, to apply downward force at the trailing edge portion of the wing.

10. The flying wing aircraft control as set forth in claim **1**, wherein the lever means is a first class lever disposed on a spanwise axis aft of the center of lift and with integral arms extending rearwardly and forwardly respectively and fixed to the upper and lower control surfaces to swing the upper and lower control surfaces into the air streams above and below the upper and lower cambered surfaces of the trailing edge portion with increasing angular inclination, to apply balanced downward force above and below the trailing edge portion of the wing.

11. The flying wing aircraft control as set forth in claim **1**, wherein the means positioning the lever means operates in unison at opposite wing tips to equally apply the said downward force for increasing angle of attack.

12. The flying wing aircraft control as set forth in claim **1**, wherein the means positioning the lever means operates differentially at opposite wing tips to apply unequal drag force for rudder and aileron function to direct the aircraft.

13. The flying wing aircraft control as set forth in claim **1**, wherein the means positioning the lever means operates in unison and differentially at opposite wing tips to equally apply the said downward force for increasing angle of attack and to apply unequal drag force for rudder and aileron functions to direct the aircraft.

14. The flying wing aircraft control as set forth in claim **1**, wherein the wing is of swept-back configuration placing the center of lift substantially forward of the trailing edge portion of the wing tips for maximizing the rotative moment arm applied by downward force of the said control surfaces, wherein the upper and lower control surfaces are flat planar members disposed spanwise in parallel relation to the upper and lower cambered surfaces of the trailing edge portion of the wing tips and are retractile into pockets in the upper and lower cambered trailing surfaces of the wing to be flush therewith when fully retracted, wherein the lever means is a first class lever disposed on a spanwise axis aft of the center of lift and with integral arms extending rearwardly and forwardly respectively and fixed to the upper and lower control surfaces to swing the upper and lower control surfaces into the air streams above and below the upper and lower cambered surfaces of the trailing edge portion with increasing angular incli-

LOCKHEED DELTA ROTOR WING TR3D PATENT+CITED | @HighEarthOrbit_ 43/51

nation to apply balanced downward force above and below opposite wing tips, and wherein the means positioning the lever means operates in unison to equally apply the said downward force for increasing angle of attack and operates differentially to apply unequal drag forces for rudder and aileron functions to direct the aircraft.

* * * * *

United States Patent [19]

Miller, Jr.

[11] **4,149,688**

[45] **Apr. 17, 1979**

[54] **LIFTING BODY AIRCRAFT FOR V/STOL SERVICE**

[75] Inventor: **William McE. Miller, Jr.**, Princeton, N.J.

[73] Assignee: **Aereon Corporation**, Princeton, N.J.

[21] Appl. No.: **728,608**

[22] Filed: **Oct. 1, 1976**

[51] **Int. Cl.**[2] **B64C 21/00**

[52] **U.S. Cl.** **244/12.4**; 244/25; 244/36; 244/56

[58] **Field of Search** ..... 244/12.1, 12.4, 42 CC, 244/36, 55, 56, 66, 65, 13, 15, 87, 25, 7 R

[56] **References Cited**

U.S. PATENT DOCUMENTS

D. 188,226	6/1960	Jones et al.	D12/76
1,855,652	4/1932	Sanders	244/55
2,380,535	7/1945	McDevitt	244/36
2,964,264	12/1960	Multhopp	244/12.4
3,029,042	4/1962	Martin	244/36
3,115,317	12/1963	Merrick	244/66 X
3,179,354	4/1965	Alvarez-Calderon	244/42 CC
3,181,810	5/1965	Olson	244/66
3,761,041	9/1973	Putman	244/36
3,829,044	8/1974	Leslie et al.	244/42 CC

FOREIGN PATENT DOCUMENTS

1939338	2/1970	Fed. Rep. of Germany	244/55
491147	5/1919	France	244/55
779508	4/1935	France	244/66

OTHER PUBLICATIONS

McE. Miller et al., "The Lifting Body Airship", Canadian Aero and Space Journal, pp. 23–29, Jan. 1976.
Dornier, U.S. Published Serial No. 265,721, 7–1943.

Primary Examiner—Galen L. Barefoot
Attorney, Agent, or Firm—George A. Smith, Jr.

[57] **ABSTRACT**

An unexpectedly high augmentation of aerodynamic lift for a given amount of power in STOL operation of a V/STOL aircraft is achieved by combining the unique features of a lifting body with those of a "jet flap", i.e. an aerodynamic mechanism in which a slipstream is directed over a deflected flap. Specifically, a movable flap is located on the trailing edge of the lifting body, and a tiltable propeller, which propels the aircraft in the normal manner in cruising, may be tilted, in low-speed flight, in order to direct air toward the leading edge of the flap and over the upper surface thereof. The movement of a large mass of air at a higher velocity over the upper surface of the flap maintains the air flow over the flap in an attached condition, and entrains and energizes the lower-velocity boundary layer on the airfoil forward of the flap, thereby producing an augmentation in lift. The lifting body lends itself especially to lift augmentation in that, for a given lifting surface area, the low aspect ratio of the lifting body gives rise to a much greater lift augmentation than would be afforded by a high aspect ratio surface.

8 Claims, 3 Drawing Figures

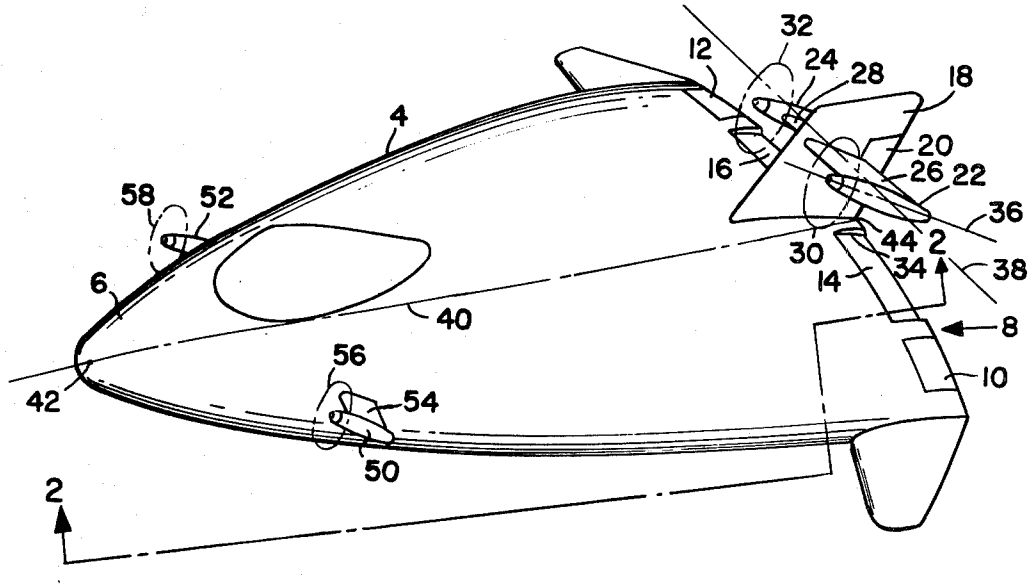

FIG. 1.

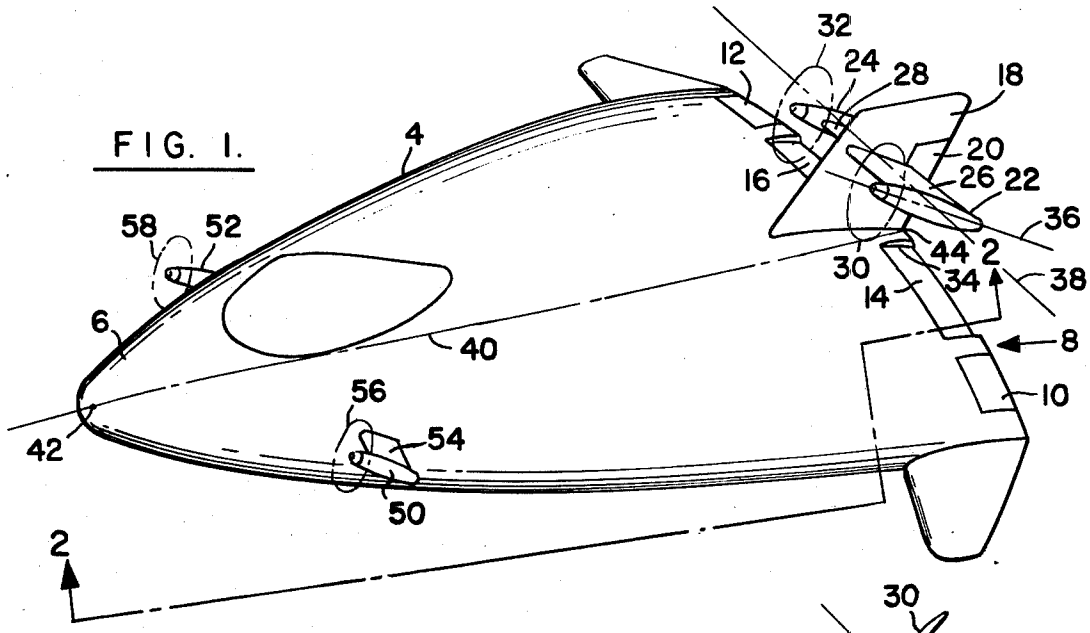

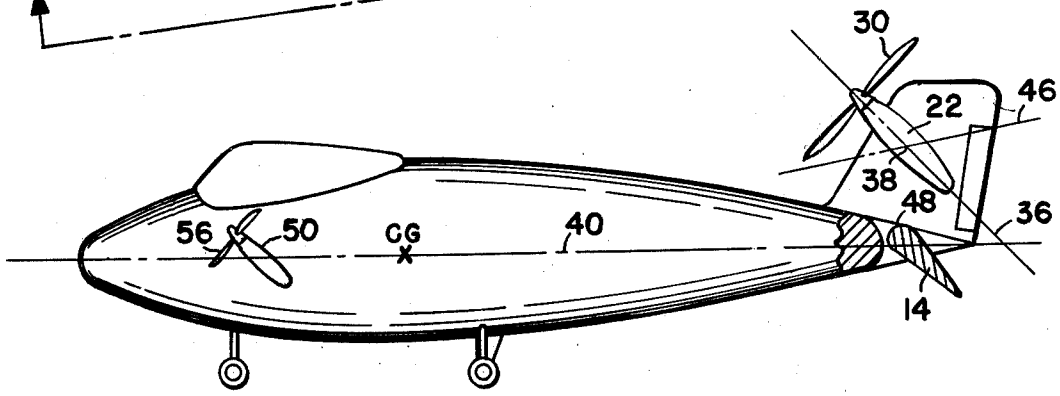

FIG. 2.

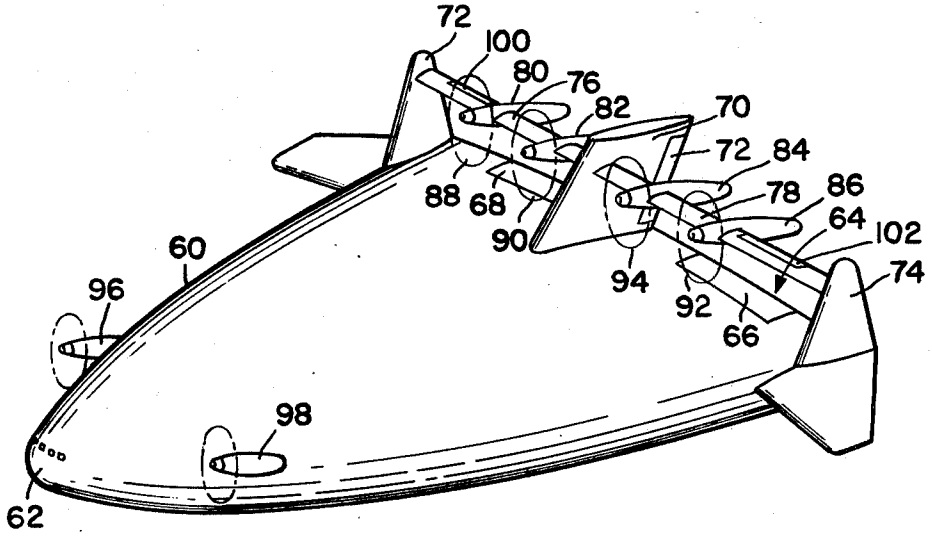

FIG. 3.

LOCKHEED DELTA ROTOR WING TR3D PATENT+CITED | @HighEarthOrbit_ 46/51

LIFTING BODY AIRCRAFT FOR V/STOL SERVICE

SUMMARY OF THE INVENTION

This invention relates to lifting body aircraft, and particularly to a lifting body aircraft designed for V/STOL (vertical, or short take-off and landing) service.

A lifting body aircraft, as the term is used herein, refers to aircraft having a substantially continuous airfoil surface from one end of its span to the other, and lacking a well-defined transition between wing and fuselage. A typical lifting body is described in U.S. Pat. No. RE. 28,454, dated June 17, 1975 to John R. Fitzpatrick and Juergen K. Bock. The lifting body described in the patent is characterized by a substantially triangular or delta-shaped planform, a nose at one corner of the triangle, and a trailing edge opposite the nose and extending between a pair of lateral extremities, each at one of the remaining corners of the triangle. The sides of the triangle which meet at the nose form portions of the leading edge, and vertical longitudinal sections of the lifting body are thick airfoil sections which may be either cambered or uncambered. The lifting body preferably comprises an enclosed hull substantially symmetrical about a central vertical plane extending from its nose to a mid-point at the wide end opposite the nose. The transverse cross-sections throughout substantially all of the length of the lifting body are substantially elliptical on either side of the central vertical plane. From the nose to the point of maximum vertical dimension in the central vertical plane, the elliptical cross-sections become progressively higher and progressively wider, with width increasing more rapidly than height. From the point of maximum vertical dimension toward the trailing edge, however, the elliptical cross-sections continue to increase progressively in width, but decrease progressively in height. Various deviations from the above-described relationships may exist in a lifting body, for example, with respect to the configuration of the nose and lateral extremities.

Such lifting bodies are designed for longitudinal static stability, possess favorable stall characteristics, and are capable of relatively high cruising speeds and relatively low landing speeds. They can be made to carry a large payload efficiently, and may be operated heavier-than-air, or, with helium, either lighter-than-air or slightly heavier-than-air.

Lifting body aircraft of the type just described have particular utility in such fields as surveillance by the police and military, aerial photography, geophysical exploration and other research activities, the transportation of equipment and supplies to and from remote areas, the efficient transportation of high-volume low-density cargo, and the transportation and handling of large externally carried loads such as pipeline sections. In many of these applications, a STOL capability is desirable.

In accordance with this invention, an unexpectedly high augmentation of lift for a given amount of power in a STOL aircraft is achieved by combining the unique features of a lifting body with those of a "jet flap", i.e. an aerodynamic mechanism in which a slipstream is directed over a deflected flap. Specifically, a movable flap is located on the trailing edge of the lifting body, and a tiltable propeller, which propels the aircraft in the normal manner in cruising, may be tilted, in low-speed flight, in order to direct air toward the leading edge of the flap and over the upper surface thereof. The movement of a large mass of air at a velocity higher than free-stream velocity over the upper surface of the flap maintains the air flow over the flap in an attached condition, and entrains and energizes the low-velocity boundary layer on the airfoil forward of the flap, thereby producing an augmentation in lift. The lifting body lends itself especially to lift augmentation in that the low aspect ratio of the lifting body gives rise to a much greater lift augmentation than would be afforded by a high aspect ratio surface of a given lifting surface area.

The principal object of the invention, therefore, is to provide an improved STOL aircraft in which the augmentation of lift is exceptionally high for a given amount of power provided. The increased augmentation of lift achieved by the use of the invention gives rise to a number of attendant advantages, among which are: the capability of operation both at high and at extremely low forward speeds, and efficient operation over a wide range of forward speeds.

BRIEF DESCRIPTION OF THE DRAWINGS

FIG. **1** is a perspective view of a small-scale lifting body aircraft in accordance with the invention;

FIG. **2** is a side elevation, partly in section, of the aircraft of FIG. **1**; and

FIG. **3** is a perspective view of a large-scale aircraft in accordance with the invention.

DETAILED DESCRIPTION

FIG. **1** shows a lifting body aircraft comprising a hull **4** having a substantially delta-shaped planform, a nose **6**, and a wide trailing edge **8** opposite the nose.

Trailing edge **8** is constituted in part by various control surfaces, including outboard elevons **10** and **12**, as well as inboard flaps **14** and **16**, these control surfaces being arranged symmetrically on either side of a centrally located vertical stabilizer **18**. The vertical stabilizer includes a rudder **20**.

The aircraft is powered by four gas turbine engines. Two of the engines, **22** and **24**, are supported from vertical stabilizer **18** on opposite sides thereof respectively by horizontally extending supports **26** and **28**. Engines **22** and **24** are positioned so that the backwash of their respective propellers **30** and **32** flows at least in part over their corresponding flaps **14** and **16**. Preferably, each engine is arranged so that substantially all of the backwash from its propeller flows over the corresponding flap. Thus, for example, engine **22** is so arranged with respect to flap **14**, that the innermost edge **34** of flap **14** is spaced from an imaginary vertical plane in which the central chord of the aircarft lies by a distance which is less than the separation between said plane and the innermost extent of the disc of propeller **30**. Engine **34** is similarly related to the innermost edge of flap **16**. The reason for this relationship, as will appear below, is that, under certain conditions, it is desired to have the backwash of the propellers come into contact with and interact with the flaps.

In cruising, the backwash of propellers **30** and **32** is directed generally horizontally. However, the engines are tiltable through a range of positions, including the position illustrated in FIG. **1**. The engines are tilted by supports **26** and **28**, which are in turn operated by a suitable drive mechanism contained within the vertical stabilizer **18**. Engine **22**, for example, has a propeller

axis **36**, which is tiltable about a second axis **38** which extends transversely to the central chord of the aircraft and substantially parallel to a straight line between the ends of the trailing edge. The central chord is shown as an imaginary chordwise line **40** extending from the center **42** of the nose to the center **44** of trailing edge **8**.

Referring now to FIG. **2**, axis **38** is shown as a point, since it is viewed endwise in FIG. **2**. Propeller axis **36** is positionable by the engine support, both in a first position illustrated by line **46**, which intersects the aircraft's center of gravity C.G., and in a second position which is the position shown. The axis of propeller **32** is similarly tiltable, and the engines are preferably interlocked with each other to insure simultaneous tilting.

The tilting of the engines allows the aircraft to develop lift efficiently at very low speeds by preventing air flow separation from the flaps when they are deflected downwardly. With flap **14** in the position shown in FIG. **2**, and the propeller axis **36** aligned in parallel relationship with line **46**, flow separation would tend to take place at the upper surface of flap **14**. This flow separation becomes more severe with greater deflection of the flap. On the other hand, with the engine tilted to the position shown, the propeller backwash is directed toward the leading edge **48** of the flap and over the upper surface thereof. The direction of the propeller backwash is more nearly parallel to the chord of the flap, and causes the flow over the upper surface of the flap to remain in an attached condition, greatly improving the overall lift of the aircraft. The aerodynamic mechanism by which a propeller slipstream directed over a deflected flap produces an increase in the lifting force acting on the wing is explained in detail in McCormick, *Aerodynamics of V/STOL Flight,* Academic Press, New York and London, 1967 pp. 194–200.

The principal advantage of this invention resides in the combination of the unique features of a "jet flap" with those of a lifting body. In particular, the jet flap, measured by the width of the flap which is influenced by the propeller backwash, is rather narrow by reason of limitations on propeller size. At the same time, the lifting body has a very low aspect ratio, i.e. less than about 2.0, and preferably less than about 1.5. In consequence of its low aspect ratio, the lifting body presents a large portion of its effective lifting surface area to the influence of the narrow jet flap. As a result, this combination of features results in a uniquely high range of variation of lift for a constant power, and hence a much greater flexibility than heretofore achieved in STOL aircraft. For example, it can be shown that the change in lift that can be achieved by the use of the invention in a lifting body having a propeller diameter to body length ratio of 1/10 and a flap chord to body length ratio also of 1/10 can be as much as 40%.

With the engine in the position shown in FIG. **2**, some lift is also attributable to a vertical component of the propeller thrust, which is an additional advantage of the arrangement described.

Desirably, the propeller axis is tiltable to a vertical condition, and the flap is pivoted at a location so that, the flap can be deflected almost vertically or vertically to provide a clearance for downward flow of a large portion of the propeller backwash. With this arrangement, all of the lift produced by the rearwardly located propellers is attributable to thrust, and vertical take-off and hovering can be achieved.

FIG. **1** also shows two tiltable forward engines **50** and **52**. Engine **50** is mounted on and positionable by a horizontally extending support **54**, which is rotatable about an axis transverse to line **40**. Engine **52** is similarly mounted on the opposite side of hull **4**. Propellers **56** and **58** on engines **50** and **52** are located forward of the center of gravity of the aircraft. The axes of these additional propellers are positionable by the rotatable supporting arms both in a first position generally parallel to line **40**, and in a second position, as best shown in FIG. **2**, wherein the backwash of the propeller is directed downwardly and rearwardly.

The forward engines are preferably positionable through a continuous range of positions from horizontal to vertical in order to produce lift through the vertical component of propeller reaction. Thus, the tiltable nature of the forward propellers allows for a high degree of flexibility in slow-speed flight, and also provides for short take-off and landing distances. Vertical take-off can be achieved by positioning the axes of all four engines vertically. One additional advantage of the forward engines is that their weight balances the moment caused by the weight of the rearwardly located engines. It is also possible to make the forward engines rearwardly tiltable to impart a rearward thrust to the aircraft, to give the aircraft greater maneuverability in hovering.

The symmetrical arrangement of the fore and aft engines with respect to each major axis provides for a four-post control about the major axes, in both hover and cruise. Locating the rear engines above and athwart the centerline axis, but inboard of the lateral extremities of the hull, permits efficient cross-shafting, and also permits the engine support-structure to act as an empennage.

FIG. **3** shows a larger lifting body aircraft comprising a hull **60** having a substantially delta-shaped planform, a nose **62**, and a wide trailing edge **64** opposite the nose. Trailing edge **64** is constituted in part by flaps **66** and **68**, the flaps being arranged symmetrically on either side of a centrally located vertical stabilizer **70**, which includes a rudder **72**.

Additional vertical stabilizers **72** and **74** are shown at opposite ends of trailing edge **64**. A first engine support **76** extends between and is supported by vertical stabilizers **70** and **72**, and a second similar engine support **78** extends between vertical stabilizers **70** and **74**. Engine supports **76** and **78** are preferably airfoils shaped to have a streamline profile. A pair of engines **80** and **82** are supported on support **76** in side-by-side relation to each other. A similar pair of engines **84** and **86** are mounted in side-by-side relation on support **78**. Supports **76** and **78** are rotatable in the same manner as supports **26** and **28** (FIG. **1**), a suitable motor-operated drive assembly being provided within vertical stabilizer **70**, and suitable bearings being provided in vertical stabilizers **72** and **74**.

Engines **80** and **82** are located with respect to flap **68** in such a way that, when engines **80** and **82** are tilted by support **76**, the backwash from their propellers **88** and **90** is directed toward the leading edge of flap **68**. Preferably, the propellers and flap are so arranged that the outermost extent of the disc of propeller **88** is spaced from an imaginary vertical plane in which the central chord of the aircraft lies by a distance which is less than the separation between said plane and the outermost extent of flap **68**. Similarly, the innermost edge of flap **68** is preferably spaced from said vertical plane by a distance which is less than the separation between said plane and the innermost extent of the disc of propeller

90. Propellers **92** and **94** are similarly located with respect to flap **66**.

The aircraft of FIG. **3** is also provided with tiltable forward engines **96** and **98**, which are similar to engines **50** and **52** in FIG. **1**. The operation of the aircraft of FIG. **3** is similar to that of FIG. **1**, the rearwardly located engines being tiltable from a first position generally parallel to an imaginary chordwise line to a second position such that the backwash of the propellers is directed toward the leading edges of flaps **66** and **68** in order to prevent flow separation from the flaps when the flaps are deflected downwardly. Desirably, the rear engines are tiltable to an extent such that the backwash is directed downwardly for purposes of vertical take-off and hovering.

In the aircraft of FIG. **3**, roll and pitch control is effected, at least in part, by control surfaces **100** and **102** which are built into supports **76** and **78** respectively. Control surface **100** is located at least in part behind the disc of propeller **88**, and control surface **102** is located at least in part behind the disc of propeller **92**. With the control surfaces so located, control effectiveness is greatly increased by the high velocity of the air flowing over at least part of the respective control surfaces as a result of the operation of the propellers. The positioning of the control surfaces **100** and **102** as described provides for effective roll and pitch control of the large aircraft, even at very low speeds. Likewise, both in FIGS. **1** and **3**, the locating of the propeller wash on either side of the vertical fin and rudder will increase yaw control effectiveness at very low speeds.

I claim:

1. An aircraft comprising in combination a lifting body and a jet flap at the trailing edge thereof, said aircraft having a substantially delta-shaped planform, a nose, and a wide trailing edge opposite said nose, movable flap means forming part of said trailing edge, propeller means for producing a propulsive thrust solely as a result of the reaction of a plurality of rotating blades with the surrounding atmosphere, said blades being mounted on a hub rotatable on a first axis, and means for tilting said first axis about a second axis located above, and extending transversely to, an imaginary chordwise line extending from the center of said nose to the center of said trailing edge, said first axis being positionable, by said tilting means, both in a cruising position wherein said hub is located directly above said delta-shaped planform and the direction of thrust exerted by said propeller means approximately intersects the center of gravity of the aircraft, and in a second position, said second position being such that, with the direction of thrust in relation to the blades being the same as in the cruising position, the backwash of said propeller means is directed toward the leading edge of said flap means, and over the upper surface thereof.

2. An aircraft according to claim **1** in which the aspect ratio of said lifting body is less than about 2.0.

3. An aircraft according to claim **1** in which the aspect ratio of said lifting body is less than about 1.5.

4. An aircraft according to claim **1** having additional propeller means rotatable about an axis and located forward of the center of gravity of the aircraft, and means for tilting said axis of said additional propeller means, said axis of said additional propeller means being positionable by said tilting means both in a first position generally parallel to said chordwise line, and in a second position, said second position being such that the backwash of the propeller is directed downwardly and rearwardly.

5. A lifting body aircraft according to claim **4** in which each of said propellers is positionable to a position in which its backwash is directed downwardly.

6. An aircraft comprising in combination a lifting body and a jet flap at the trailing edge thereof, said aircraft having a substantially delta-shaped planform, a nose, and a wide trailing edge opposite said nose, movable flap means forming part of said trailing edge, propeller means rotatable on a first axis, and means for tilting said first axis about a second axis extending transversely to an imaginary chordwise line extending from the center of said nose to the center of said trailing edge, said first axis being positionable, by said tilting means, both in a cruising position wherein the direction of thrust exerted by said propeller means approximately intersects the center of gravity of the aircraft, and in a second position, said second position being such that the backwash of said propeller means is directed toward the leading edge of said flap means, and over the upper surface thereof, and having a centrally located, upwardly extending vertical stabilizer, and in which such propeller means comprises at least two engines each having a propeller drivable thereby, and said tilting means comprises means supporting said engines from said stabilizer on opposite sides thereof.

7. An aircraft according to claim **6** having two additional upwardly extending vertical stabilizers on opposite sides of said centrally located stabilizer and in which said tilting means comprises means laterally extending between said centrally located stabilizer and said additional stabilizers and supported thereby, for supporting said engines from said stabilizers on opposite sides of said centrally located stabilizer.

8. An aircraft according to claim **7** in which said means laterally extending between said centrally located stabilizer and said additional means are airfoil means having movable control surface means thereon located at least in part in the path of the backwash of said propellers.

* * * * *

United States Patent [19]

Opfer

[11] **Des. 244,265**

[45] ** **May 10, 1977**

[54] **AIRCRAFT**

[75] Inventor: **Waldo Virgil Opfer**, San Diego County, Calif.

[73] Assignee: **Teledyne Ryan Aeronautical a Division of Teledyne Industries, Inc.**, San Diego, Calif.

[**] Term: **14 Years**

[21] Appl. No.: **604,631**

[22] Filed: **Aug. 14, 1975**

[51] **Int. Cl.** ..... **D12—07**
[52] **U.S. Cl.** **D12/71**
[58] **Field of Search** ..... D12/71; 244/15, 36, 244/46, 48, 45 R, 45 A

[56] **References Cited**

U.S. PATENT DOCUMENTS

D. 177,500	4/1956	Heinemann et al.	D12/71
D. 196,343	9/1963	Norman et al.	D12/71

Primary Examiner—Alan P. Douglas
Attorney, Agent, or Firm—Carl R. Brown

[57] **CLAIM**

The ornamental design for an aircraft, substantially as shown.

DESCRIPTION

FIG. **1** is a perspective view of an aircraft, showing my new design;
FIG. **2** is a top plan view thereof;
FIG. **3** is a side elevational view thereof;
FIG. **4** is a front elevational view thereof;
FIG. **5** is a bottom plan view thereof; and
FIG. **6** is a rear elevational view thereof.

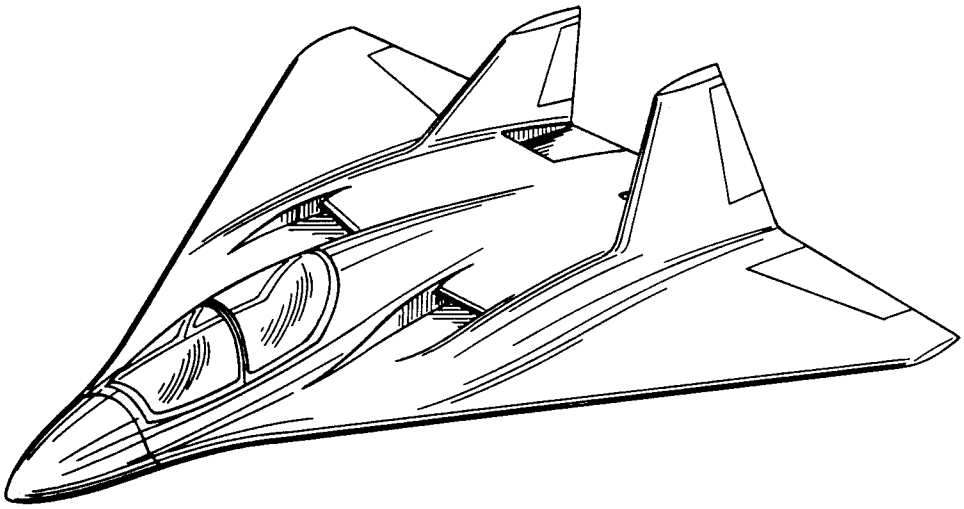

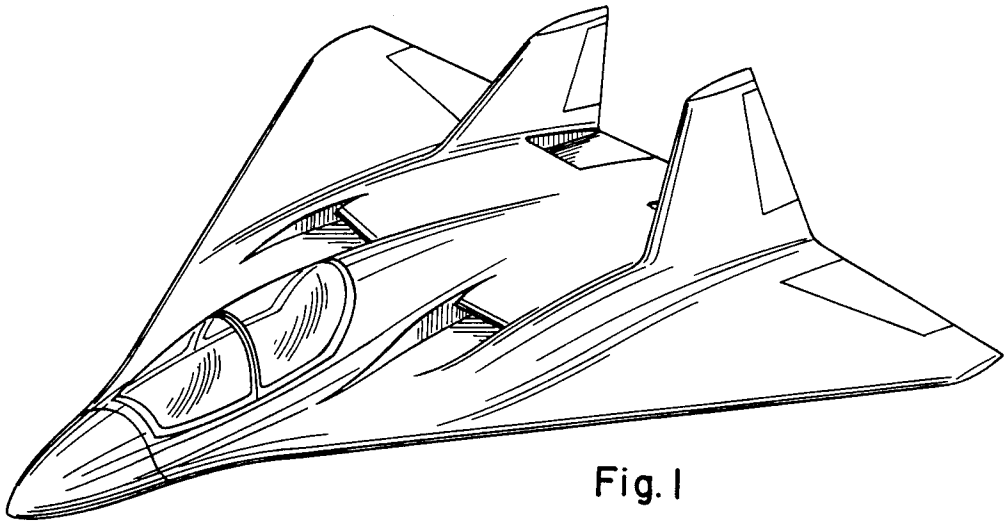

Fig. 1

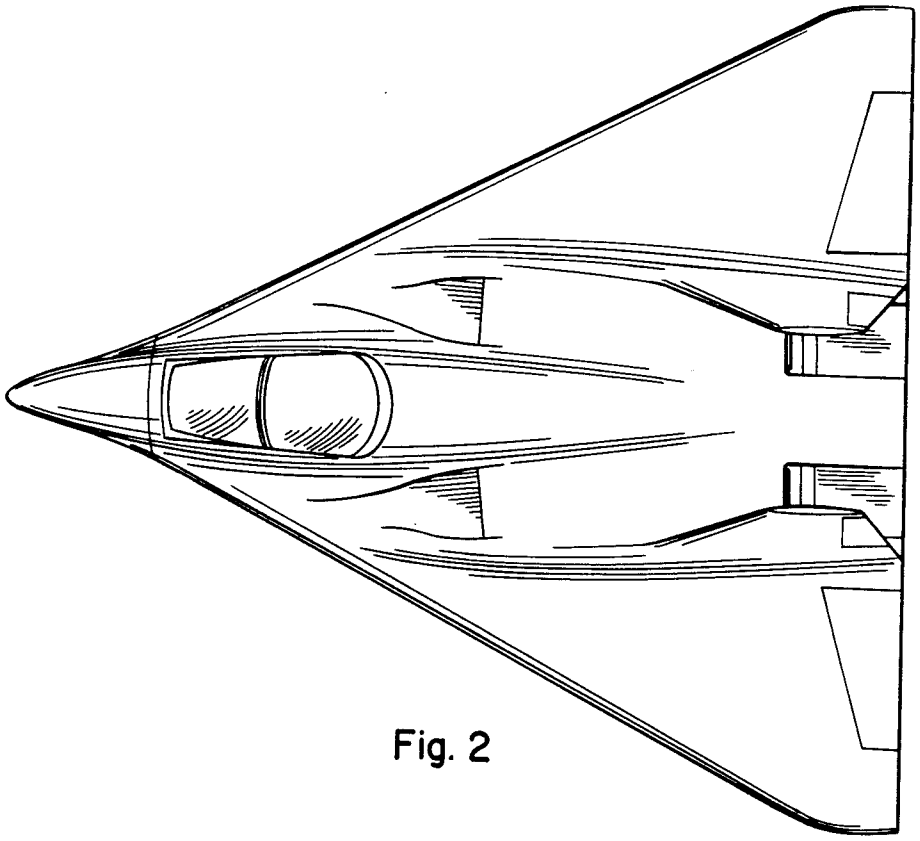

Fig. 2

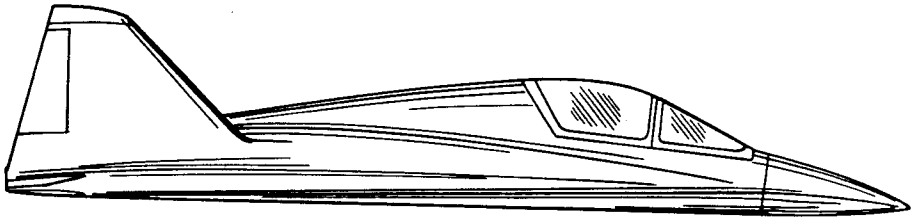

Fig. 3

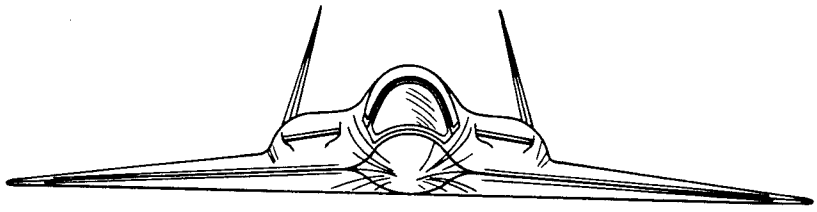

Fig. 4

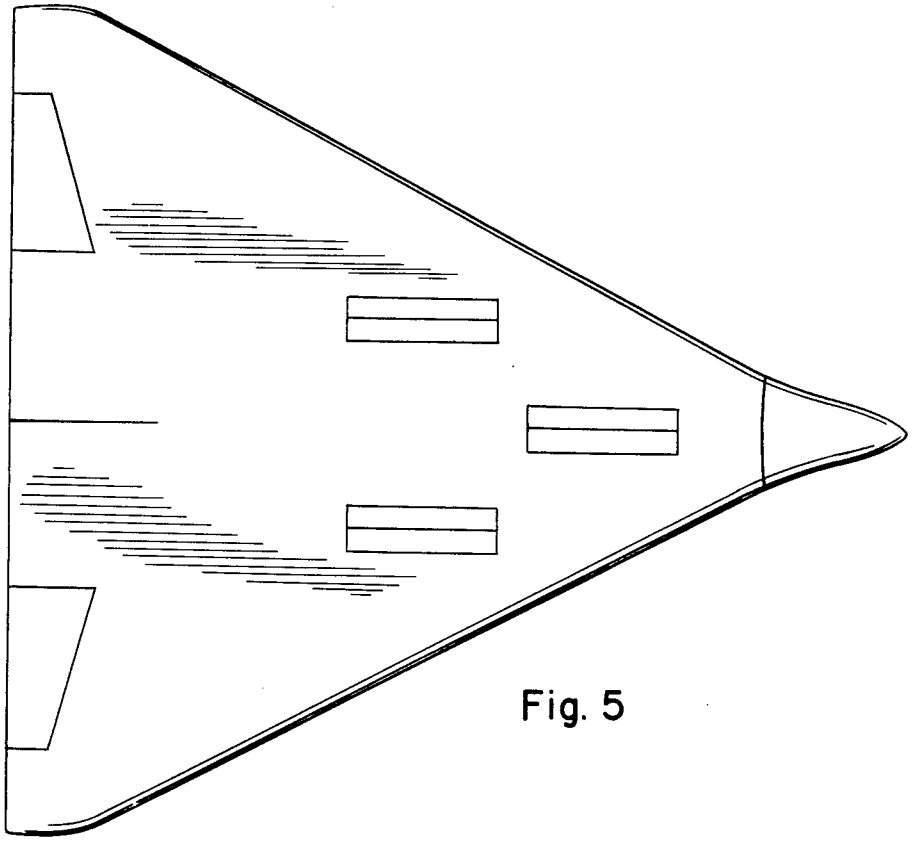

Fig. 5

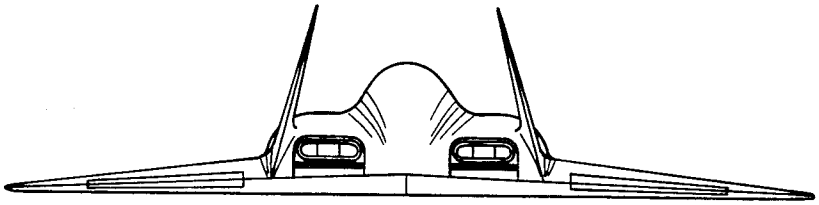

Fig. 6